GENERAL MOTORS

ENGINEERING JOURNAL

Volume 13 - - - - Number 2

Second Quarter, 1966

for educators
in the fields of engineering
and allied sciences

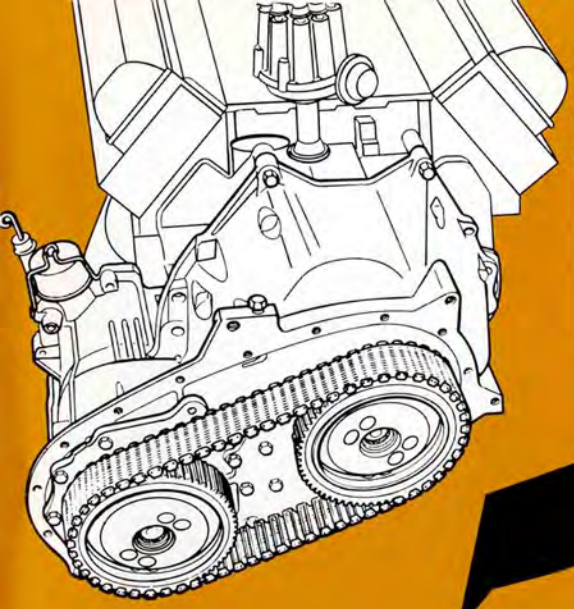

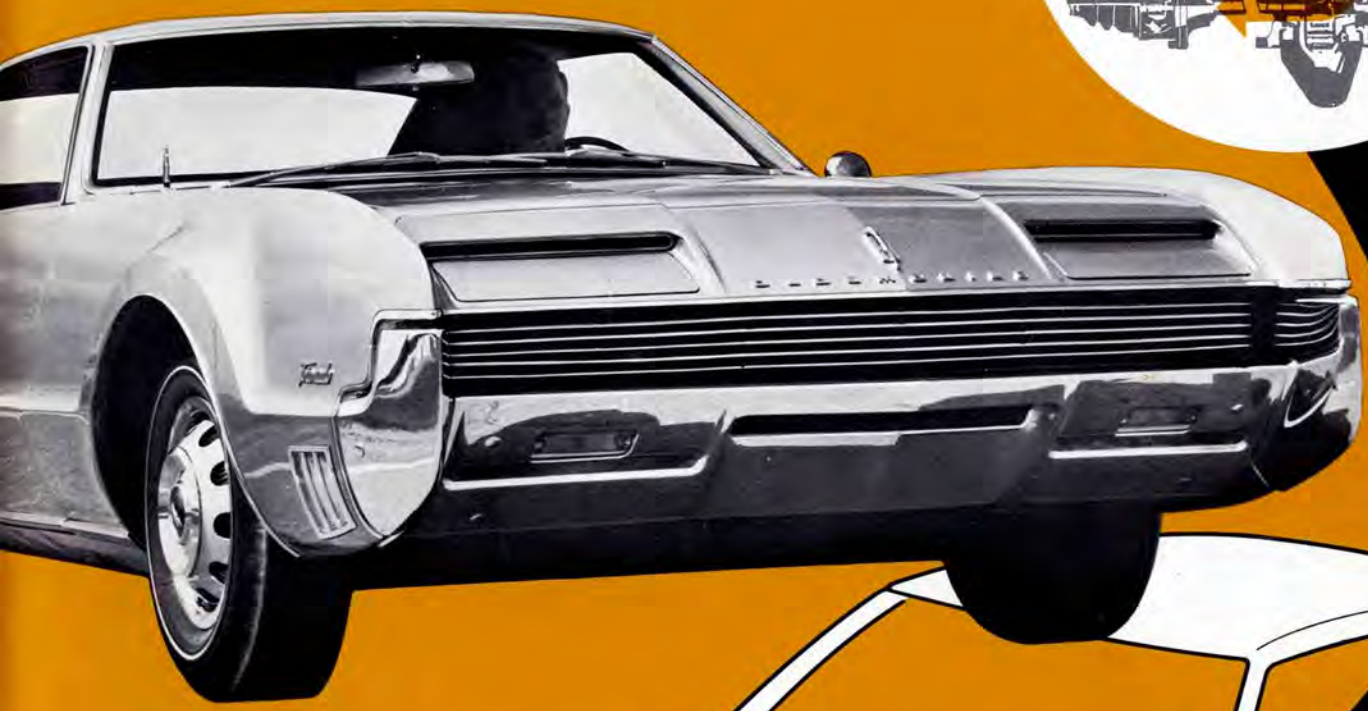

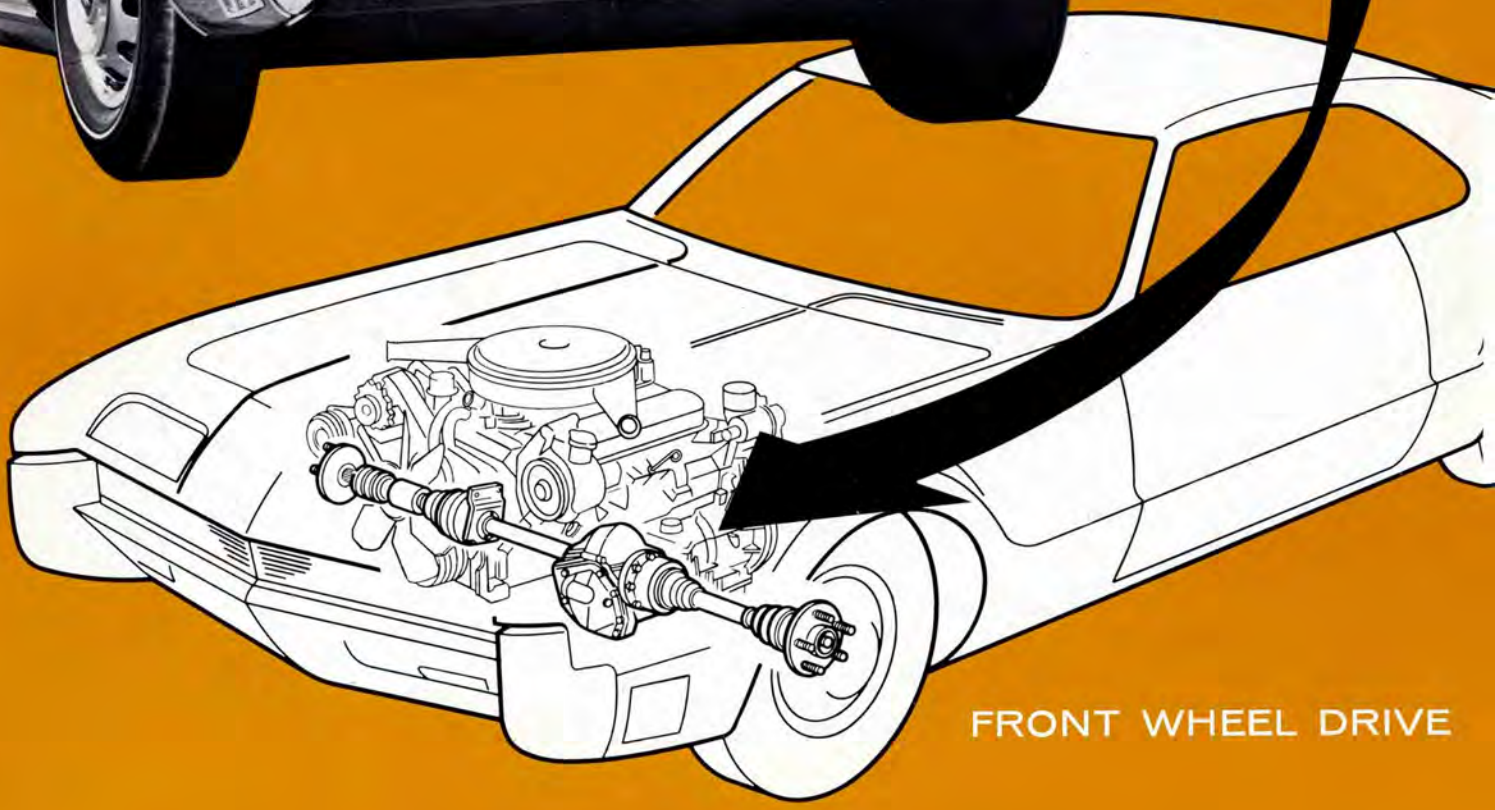

FRONT WHEEL DRIVE

Many—Instead of a Few

To develop and maintain a capable, aggressive, and knowledgeable organization, it is necessary for management to be progressive and open-minded. Nowhere is this more important than in engineering organizations devoted to product design, manufacturing, and methods, such as exist at Oldsmobile Division.

In all these departments over the years, Oldsmobile has developed as talented and capable a group of engineers as there is in the industry, all dedicated personally to the advancement of automotive technologies. Individual motivation, efficiency, and aggressiveness remain high under a system that produces a two-way flow of new ideas, new products, new concepts, and new processes. Stagnation and outmoded products are avoided.

Some time ago, the Product Engineering Department at Oldsmobile embarked on a vehicle design and development project that was to challenge the ingenuity of the product engineer and cause him, as well as the manufacturing and methods engineers, to dig hard for new techniques. At that time it was judged that with the diverse interests, habits, and wants of modern Americans an all-new car, with sophisticated design and superior driving characteristics, would be received enthusiastically by the public and the Oldsmobile dealers.

When it was determined that Oldsmobile was to proceed to production with a front wheel drive car and the 1966 model year was set for the date of its introduction, an important decision had to be made. Should the job, after completion of the advanced design phase, be turned over to our regular design and development groups, or should we organize a smaller group of specialists to handle the work?

We were tempted to choose the latter course because this was to be a completely new car, it was scheduled for future introduction, and progress might be followed and evaluated more effectively if the work were controlled by a relatively small group of engineers.

We finally decided to give all departments their share of the Toronado responsibility. In this way, many more of our people would be involved and Oldsmobile would benefit from a much greater potential of ideas, abilities, and talents. Aside from the successful completion of work on the Toronado, there would be another end product—the pride of accomplishment that would be shared by the entire organization, instead of by just a few.

When the decision was made, the challenges of the Toronado were accepted by the engineering department as a whole, and work progressed on this modernly powered, full-size, front wheel drive automobile, which would have the added attribute of efficient use of space. As our product engineers in the engine, transmission, chassis, and body groups made progress in their specific assignments, the methods and manufacturing engineering phases of the work were handled similarly as regular departmental projects.

The Toronado was introduced successfully this past fall. Its sales have reflected a high degree of acceptance on the part of the motoring public. It has been proclaimed an excellently engineered, exciting, and desirable car. But of further importance is the justifiable pride of accomplishment shared by so many people. This pride has spread throughout the entire Oldsmobile organization. The morale of Oldsmobile people everywhere is higher because of the part they played in the Toronado achievement.

H. N. Metzel

H. N. Metzel,
Vice President of
General Motors,
General Manager of
Oldsmobile Division

THE COVER

The front wheel drive Toronado by Oldsmobile is the subject of this issue's cover design by artist Richard P. Renius. Among the significant engineering innovations embodied within the Toronado is the power transfer system—engine, transmission, final drive, and front axles. A schematic representation of the path of power flow is shown at the top, right. A variable stator torque converter is attached in a conventional manner to the rear of the engine, but the gear sets and control elements are rotated 180° and enclosed alongside the converter. A multiple link chain transfers torque from a drive sprocket at the rear of the converter to a driven sprocket at the rear of the gear sets. A splineshaft connects the transmission gear output with the differential. Differential torque is split between the two front drive axles. When the Toronado moves straight ahead, gears rotate at the same speed. During turns, the planetary gears revolve with differential action and the drive axles rotate at different speeds. Each axle driveshaft has inboard and outboard constant velocity universal joints. The drawing at the top shows a rear view of the transmission and the chain drive. The drawing at the bottom shows the final drive unit and front axles.

A Summary of Advanced Design Studies for the Front Wheel Drive Toronado

The Toronado spent its beginning years with the engineers in Oldsmobile's Advanced Design Group. During this time it progressed from initial conception to basic final design of the power and drive unit configuration. It was here that the Toronado acquired a split transmission with the torque converter connected to the engine crankshaft, a chain drive and sprocket method of power transfer, and a planetary differential. Once the basic design configuration was determined and approved, the project was turned over to product design and development engineers for production development.

THE Oldsmobile Toronado with its unitized power package is the culmination of an idea that began as an exploratory design study in Oldsmobile Division's Advanced Design Group. Now, several years and over a million test miles later, it is a production automobile. The Toronado's effect on the future of American car design could be significant, for it incorporates advantages never before attained.

In the beginning there was only an idea—the concept of powering an automobile so that the driver and passengers would receive maximum benefit from the vehicle. The idea was simple enough: employ a front wheel drive with all of the power and driving components designed into a single unit forward of the passenger compartment. The advantages of this unitized power package approach would be:

- Maximum passenger space and freedom of seat placement, since the drive shaft to the rear axle would be eliminated allowing practically flat front and rear floors
- A larger trunk area in the rear, since there would be no need for an axle kick-up in the trunk floor
- A quiet, nearly vibration-free ride, since the long, high rpm drive shaft would be eliminated and all of the driving mechanical components would be concentrated ahead of the passenger compartment
- Excellent drive traction, particularly on wet or slippery surfaces, since the drive would be moved to the heavier loaded front wheels
- Exceptional directional stability that would reduce the effect of crosswinds
- Excellent handling
- Greater freedom of styling a full-size six-passenger car since, with no center tunnel, the roofline could be lowered without sacrificing passenger space and headroom.

This was the idea, and these were the contemplated advantages. The problem was to design and develop such a vehicle.

Basic Functions of Oldsmobile's Engineering Organization

In tracing the steps leading to what eventually became the Toronado, it first is helpful to understand the Oldsmobile engineering organization. The Product Engineering Department is divided into three basic areas of activity: Advanced Design, Product Design-Development, and Test Engineering. In the Advanced Design Group, an idea takes its first physical form. Layouts, mathematical analyses, the fabrication of experimental parts, and the building of experimental cars occur. It is here that various designs are tried, modified, improved upon, and finally recommended for production development. This is the phase that requires the most time—more than five years in the case of the Toronado.

Product Design-Development takes over once the basic configuration of the automobile has been established. It is here that the original design developed by the Advanced Design Group is put into its final production form. Prototype vehicles are built and tested exhaustively and designs are modified accordingly. At this stage, the manufacturing activities are coordinated in anticipation of production start-up.

The Engineering Test Group is the vital link between theory and practicality—what will and will not work. Very early in the design program the new parts and configurations are subjected to intensive life cycle testing in the laboratory and on the road. The facilities of the General Motors Proving Grounds at Milford, Michigan, Mesa, Arizona, and Pike's Peak are used.

Advanced Design Group Explores Basic Configuration

When Oldsmobile's Advanced Design Group undertook the first studies of a front wheel drive configuration, it marked the beginning of the Toronado. In the early developmental stages, the front wheel drive concept was primarily applicable to the small size car program then in progress at Oldsmobile. (This car was the F-85 that eventually emerged in 1961 with rear wheel drive.)

It was evident from the start that finding the best arrangement of engine, transmission, and final drive and developing a way to transfer engine power would be the key to a successful program. The design concepts at this time were varied, and included the use of either gears or chain and sprockets to transfer power from the engine to the final drive unit. It was the task of the Advanced Design Group to explore all of the various possibilities and arrive at a successful arrangement of components and method of power transfer.

Chain Drive Selected to Transmit Power

One of the key considerations in the construction of the first front wheel drive

By ANDREW K. WATT
and JACK R. WALLACE
Oldsmobile Division

Basic power and drive unit developed

car was the design of the connecting link to transmit engine power. Since there had been no known previous investigations concerning this basic and vital link, considerable time and effort was spent in determining the best configuration. Two power transfer methods were considered. One method used a gear drive which required several precision mounted bearings for frictionless operation and to control the high thrust forces. An idler gear provided the proper direction of rotation on the driven gear. The alternate choice was a simple chain and sprocket arrangement. After considering the features of each system, it was decided that the chain and sprocket offered the most advantages, and the front wheel drive developmental program continued with this arrangement. A testing program was outlined and a test fixture was designed to study life, noise, lubrication requirements, and other characteristics of the chain drive.

The first testing fixture simulated the overall car parameters. A V-6 engine drove a four-speed Hydra-matic automatic transmission. The transmission

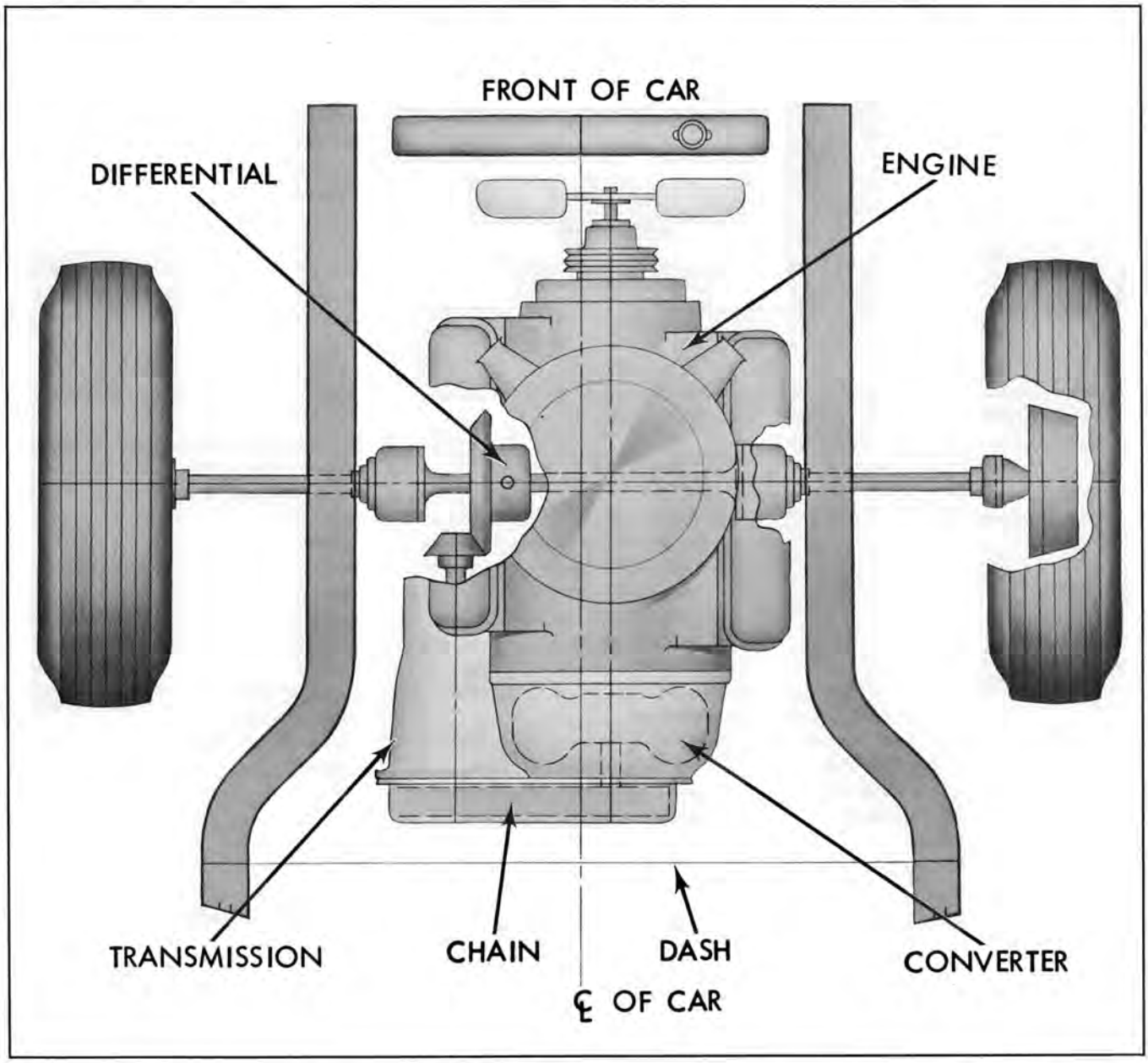

Fig. 1—FRONT WHEEL DRIVE DESIGN CONFIGURATION. A significant design feature of the Toronado unitized power package is the location of the torque converter at the end of the crankshaft of the longitudinally mounted engine. The converter cushions the engine firing impulses, eliminates load peaks to the chain drive, and results in smooth operation of the drive train.

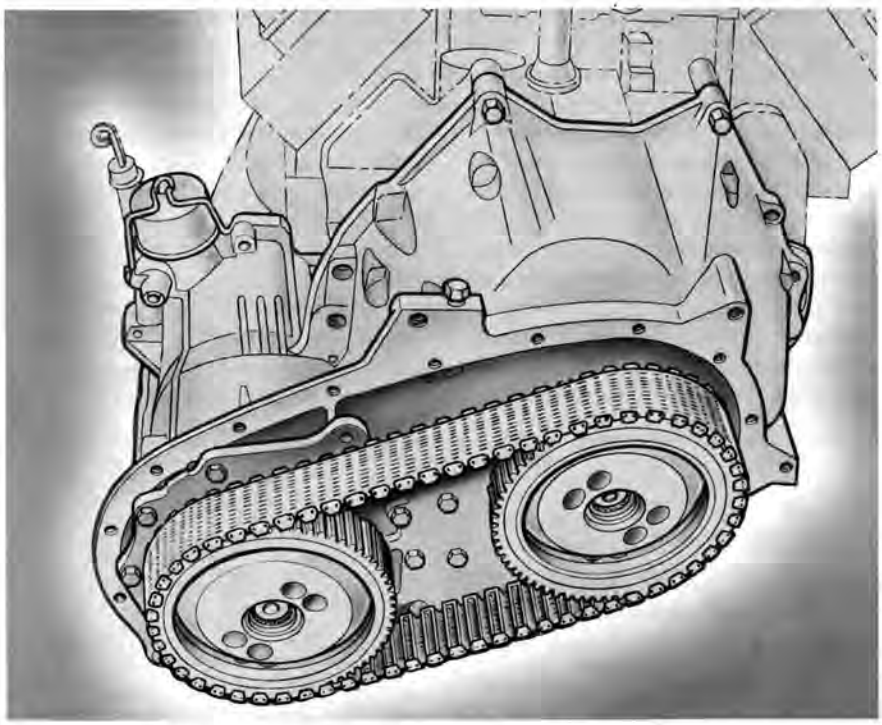

Fig. 2—TORONADO UNITIZED POWER PACKAGE. The transmission is split with the torque converter connected to the engine crankshaft and the mechanical transmission connected to the differential. A chain and sprocket drive arrangement transfers engine power from the converter to the transmission.

output was coupled to the input of an absorption dynamometer, which in turn was coupled to a massive inertia wheel to simulate the car mass in acceleration or deceleration. By March 1959 the test fixture was operating on a durability schedule.

Experimental Car Built

Early in 1960, the first front wheel drive experimental car was built and its performance, ride, and handling were evaluated. The car had a frame-integral body with a sub frame to carry the unitized power package. The drive shafts used constant velocity Rzeppa joints at the wheel and non-constant velocity universal joints capable of lateral displacement at the differential. The car had a wheelbase of 112 in., an overall length of 180 in., and a weight of 3,363 lb. The performance and handling characteristics of the car were highly encouraging and it exhibited good directional stability. There were areas where additional development work was needed, mainly in the driveshaft and chain. In July 1960 the test car was rebuilt and incorporated, among other changes, new upper control arm bushings and constant velocity inner universal joints that provided improved driveshaft performance.

Developmental Work Changes to Full-Size Car

In the meantime, a more simplified design of the unitized power package had been started, still in a small size car. Before this design actually was tested in a car, however, it was decided that all developmental effort on the front wheel drive design be concentrated on a full-size car powered by an Oldsmobile V-8 Rocket engine.

This revised approach to the front wheel drive automobile was based on the concept of producing a luxury sports type car that would offer outstanding performance and handling while providing space utility never before offered in a car of this type. Marketing studies confirmed the potential demand for such a car and showed that buyers in this price class were most interested in new features.

By mid-1961, the initial design concepts for a full-size front wheel drive car were formulated. During this early period, various type gears had been under extensive design and testing by the GM Engineering Staff's Transmission Development Group to re-evaluate the merits of chain versus gear drive. None of the gear combinations proved to be satisfactory, particularly from a noise standpoint. Therefore, the power transfer design remained with chain drive for quietness and simplicity.

Development progressed on the general design concepts. By January 1963 the design had the V-8 engine driving through a torque converter to a chain sprocket, thence through a chain to the transmission. This converter location later proved to be an important design feature. It became apparent from the results of laboratory testing that when the torque converter was interposed between the engine and the chain, the engine firing impulses were sufficiently cushioned to rid the chain of load peaks. Chain durability and noise proved satisfactory with this configuration.

At this same time, the front suspension was redesigned to incorporate laminated torsion springs. Previously, coil springs had been mounted above the upper control arm. The laminated torsion springs were replaced later by solid torsion bars of simpler design.

Early in 1963 layouts were begun for what ultimately became the final basic front wheel drive design configuration (Fig. 1). This design of the engine, transmission, and differential power package offered a high performance engine coupled to an automatic transmission and planetary differential by means of a chain and sprocket arrangement. (Fig. 2). Other design features included: constant velocity inboard and outboard universal joints; torsion bar front suspension offering complete isolation of the suspension system from the frame via rubber bushings; outboard finned cast iron brake drums cooled through openings in the wheel spiders; and single-leaf spring rear suspension with hat cross section rear axle.

Conclusion

Such was the Toronado design and development in February 1964 when Oldsmobile demonstrated the car at the Desert Proving Ground in Mesa, Arizona, to several General Motors executives. Subsequently, Corporation approval to proceed with the development of the Toronado for 1966 production was received and the project left the Advanced Design Group for the design-development groups and production development.

A Summary of the Final Design and Development of the Toronado Chassis

By JAMES H. DIENER
and RALPH W. PERKINS
Oldsmobile Division

After Oldsmobile Division's Advanced Design Group established the basic design for the Toronado, the design program was continued by the various design-development groups within the Product Engineering Department. The Chassis Design Development Group was responsible for the Toronado chassis components, including the frame, suspension, mountings, axles, wheels and tires, and the braking, fuel, exhaust, and steering systems. The final design of these components took into consideration the advantages, as well as the restrictions, provided by the front wheel drive concept.

Front drive concept led to several chassis design innovations

ONCE the basic design for the Toronado had been established by the Advanced Design Group, the job of preparing the final design was given to various design-development groups. Early in 1964, work was begun to ready the car for introduction as a 1966 production model. Chassis development was carried out by the Chassis Design-Development Group.

Front Drive Required New Frame Design

In the initial concept, Oldsmobile's front wheel drive car consisted of a body with integral frame construction. A separate sub frame, which supported the front suspension, unitized power package, and final drive train, terminated under the front seat (Fig. 1). Six rubber biscuit body mountings (four at the dash and two at mid-section) were used to join the body and sub frame. The rear suspension was mounted directly to the integral structure under the body.

Using this frame, the first test cars demonstrated insufficient torsional and beaming strength on rough road surfaces, a resonant beaming shake on freeways, and excessive road noise. To achieve a stronger frame for structural requirements and to obtain satisfactory levels of noise isolation and freedom from vibration, the box section frame side rails were extended to terminate just behind the rear seat (Fig. 2). Side rail stock thickness and section depth were increased to double the beaming strength and eliminate shake. Extending the frame also allowed the rear spring front eye to join the chassis assembly, which improved the frame-to-body isolation under the passenger compartment.

Two body mountings were added under the rear seat behind the front eye of the rear leaf spring. Body mounting brackets at the dash were combined with the transmission support crossbar as an integral part of the frame. The transmission support cross bar was made into a box section with full depth side rail attachments, which resulted in greatly improved torsional rigidity. The eight body mountings were enlarged to give a 60 per cent increase in rubber area. A softer, high-dampening material was used for further isolation of noise and vibration.

The improvements in frame strength reduced shake and permitted the use of softer body mountings that successfully eliminated road noise and vibrations. At the same time, the remaining frame-integral construction at the rear occupied minimum space, allowing maximum room in the trunk area.

Front Suspension Has Torsion Bars

The front wheel drive configuration presented different front suspension requirements from those of rear drive cars.

In the Toronado front suspension (Fig. 3), the upper control arm is a stamped A frame design with eccentric cam-type caster and camber adjustment for faster

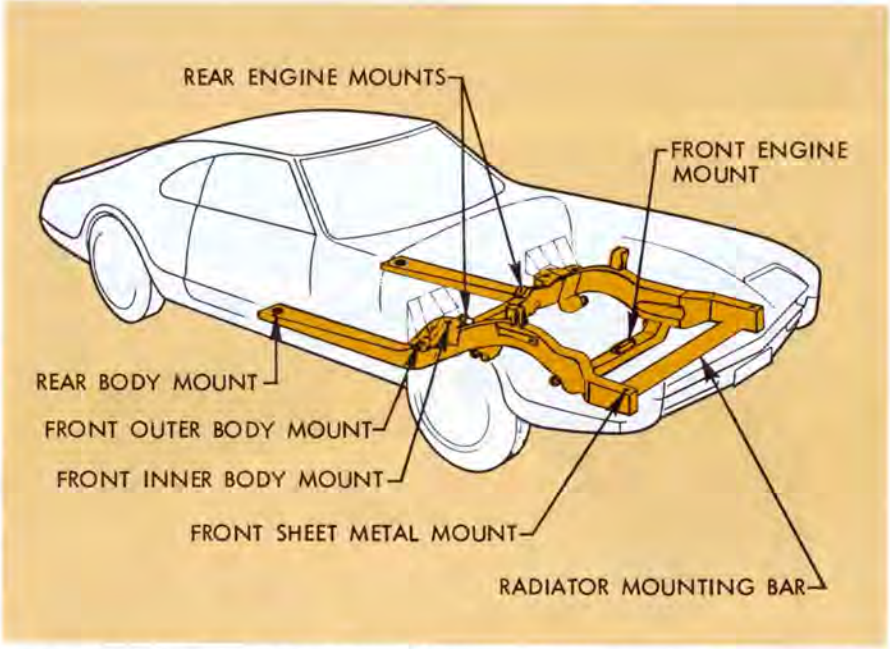

Fig. 1—EARLY FRONT WHEEL DRIVE FRAME CONCEPT. An early design concept of a frame for Oldsmobile's front wheel drive vehicle consisted of a body with integral frame construction. A separate sub frame to support the engine, front suspension, and final drive extended under the front seat. This was one of several concepts considered during the design evolution of the Toronado frame.

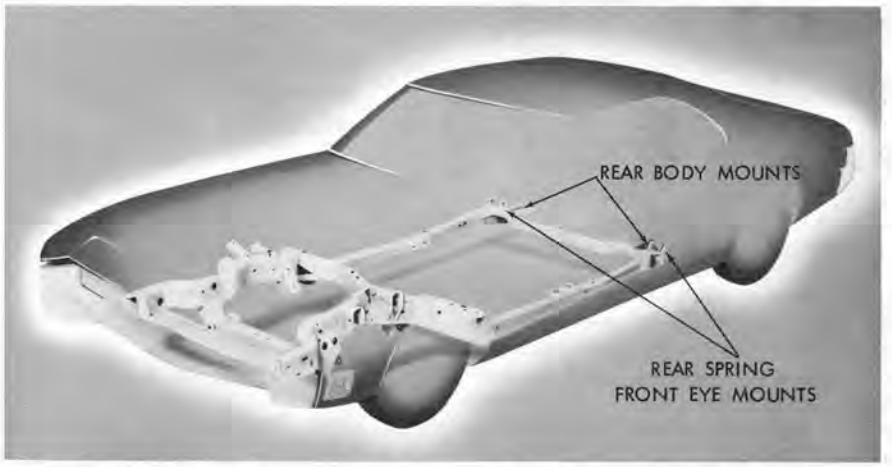

Fig. 2—TORONADO FRAME DESIGN. The Toronado sub frame extends from the front of the vehicle underneath the passenger compartment to a point beneath the rear seat. In addition to supporting the power train and front suspension, the frame serves as an anchor point for the rear suspension spring.

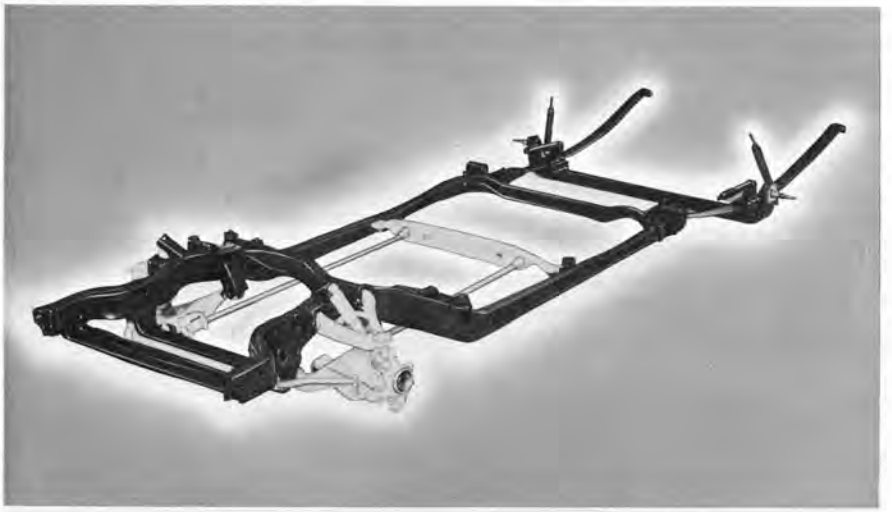

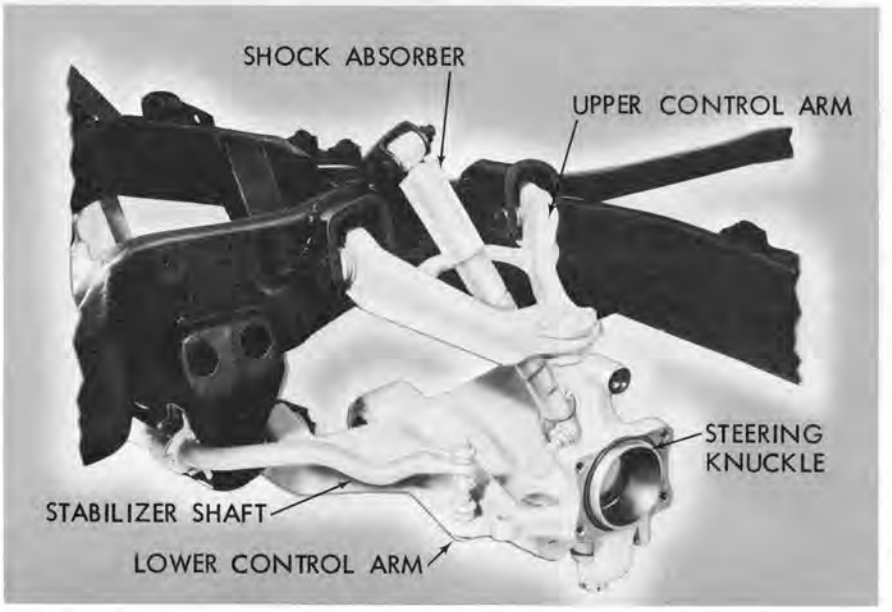

and more accurate alignment settings. The lower control arm is an assembly of heavy box section stampings that provide the most efficient strength-to-weight ratio. Compression type lower ball joints are used because their compact nature is more favorable to the front wheel drive design than the larger tension type. Silent-block type rubber bushings are used to isolate vibration at the frame pivot points.

Early in the advance design program, torsion bar front springs were found to be ideal for the front drive vehicle (Fig. 4). Front end leveling is accomplished at the rear frame anchors so that one basic torsion bar fulfills the front trim height requirements for the range of loads incurred by accessories.

By designing to moderate stress levels and using good corrosion protection on the active section of the bar, excellent torsion bar life was obtained. Cars running at the General Motors Proving Ground during the winter months indicated a need for added corrosion protection at the rear anchor of the torsion bar-to-frame support. An effective seal was created by the use of a stamped cup and rubber boot (Fig. 4).

The front shock absorbers (Fig. 5) provide integral compression and rebound bump stops, in addition to ride control. Steering knuckles have integral steering arms and dual wheel stops. A double-row ball bearing is mounted in the center of each knuckle for the live spindle and drive axle of the front wheel drive.

Front Axle Required Special Design Consideration

One of the most important single considerations in the chassis development program was the design of the front wheel axles. The axle requirements were threefold: to transmit up to 42,000 lb-in. of torque to each wheel; to angulate up to 38° at the outboard, or wheel, position and up to 15° at the inboard position; and to provide axial slip for wheel travel, engine movement, and production tolerances.

Fig. 3—FRONT SUSPENSION DESIGN. The front suspension of the Toronado was designed to meet the unique requirements of a front wheel drive vehicle. The installation of the front suspension on the frame is shown at the top. Details of the control arms, shock absorber, and steering knuckle are shown at the bottom.

Fig. 4—TORSION BARS. The torsion bars extend from the lower control arms to their anchor points in the frame crossmember. To protect the anchor from corrosion, an effective cup and rubber boot seal (bottom) was developed.

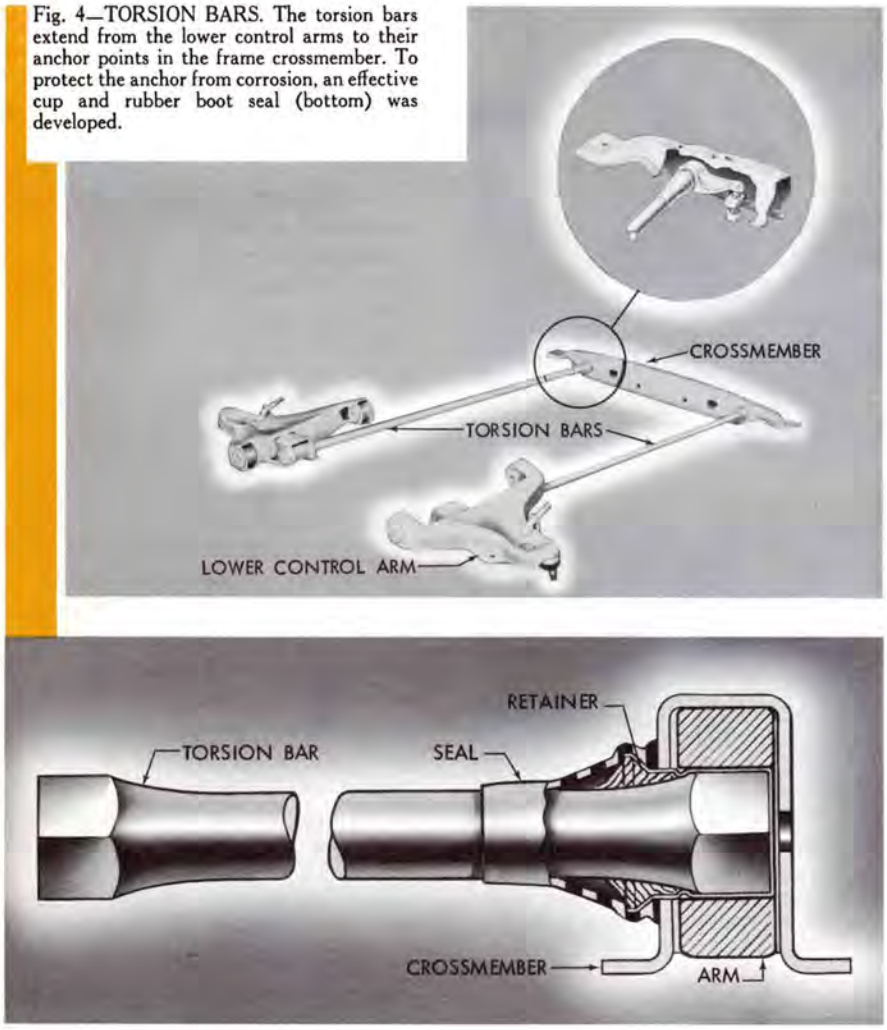

The final front axle design (Fig. 6) uses a constant velocity Rzeppa joint at the outboard position. This joint consists of an inner race, six balls, a cage that positions the balls, and an outer race. Torque is transmitted from the inner race to the balls, then to the outer race. The cage positions the balls in a plane that always bisects the angle of the joint, which accounts for the constant velocity operation. Because the inner and outer races are curved, the joint does not afford slip. At the inboard location, a ball spline is added to the joint to provide the required lateral slip as the suspension swings.

To eliminate the effect of lash in the drive train, which roughened transmission shifts and caused a perceptible bump during torque reversals, a rubber coupling (torsional damper) was added to the right front axle between the inboard and outboard joints. This coupling, similar in construction to the coupling used in conventional propeller shafts, consists of two doughnut-shaped rubber elements under radial compression and mechanical stops to take high torque in both forward and reverse. The torsional flexibility introduced here results in smooth power flow through the drive train.

During the development program, it was recognized that excellent axle universal joint boot seal durability was essential. Rubber stress, hardness, thickness, and convolution shape were all important factors in achieving satisfactory seal flex life, abrasion resistance, and high speed operation. The amount of rubber required to prevent high rubber stresses at maximum joint angles also had to be controlled so that the folds of the boot would not rub excessively against the axle joint or each other. It was found that some grease in the seal helped to minimize internal scuffing, but that the amount had to be controlled because an excess would distort the seal at high speed.

The hardness of the rubber was important since harder rubber led to a short flex life while softer rubber caused distortion at high speeds. The thickness of the rubber had a similar effect. An increase in thickness shortened flex life, a decrease lowered the speed at which distortion occurred. The final design of

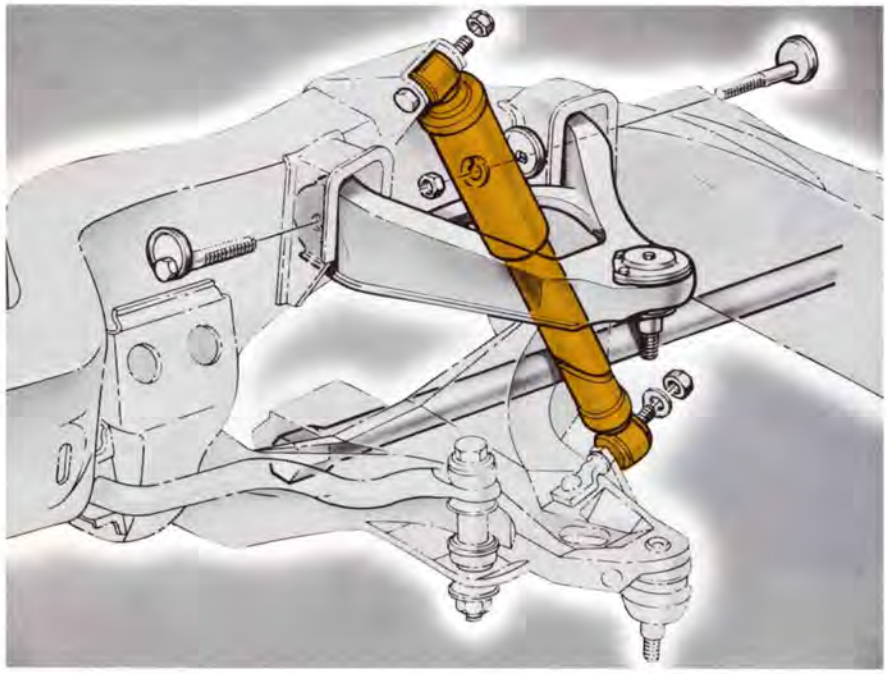

Fig. 5—FRONT SHOCK ABSORBERS. Shock absorbers provide integral compression and rebound bump stops in the front suspension.

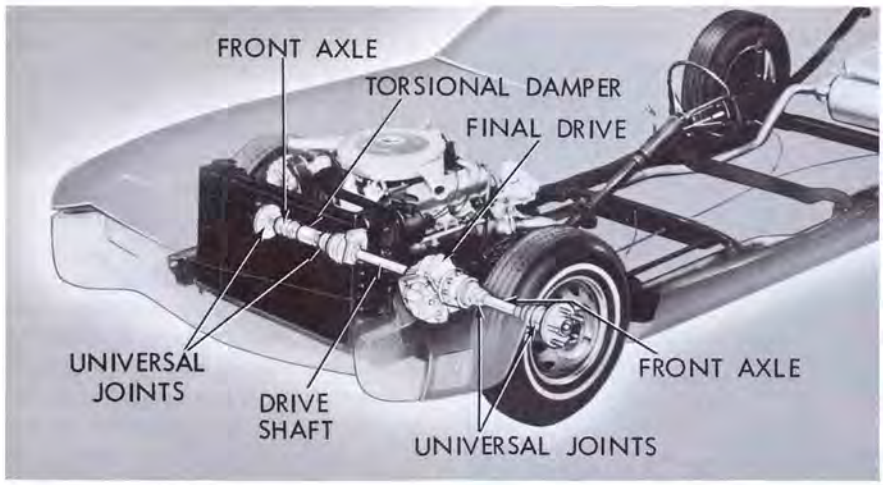

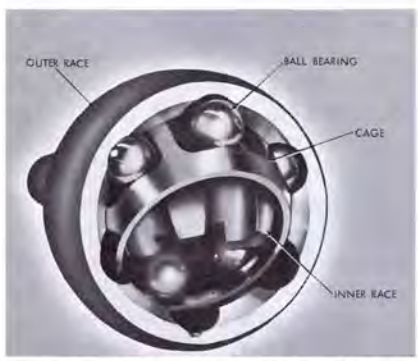

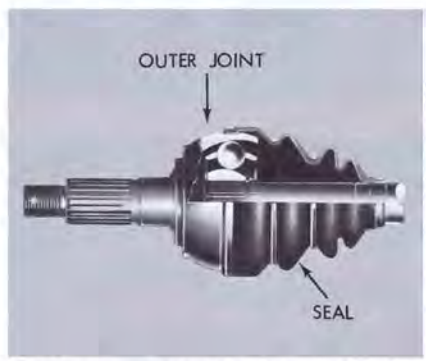

Fig. 6—TORONADO FRONT AXLE INSTALLATION. The phantom view of the chassis at the top indicates the positions of the final drive unit and front axles in the vehicle. Constant velocity Rzeppa joints (left) are used at the outboard, or wheel, positions. The joints are protected by a rubber boot seal (right).

the seal satisfied all of these parameters.

A design factor recognized early in the test program was the need to avoid puncturing of the rubber boot seals. Puncture from internal parts during angular operations of the joints was prevented by eliminating internal pinching conditions. Burrs and sharp edges in the proximity of the boots were eliminated to prevent puncture from external sources.

An interesting problem of mysterious seal damage occurred on Proving Ground cars during winter testing. Seals were scuffed but no foreign material was present and clearance to adjacent suspension parts appeared adequate. It was found that when one wheel spun, the shaft reached higher than normal speeds for short bursts, due to differential action. This could occur if the car was accelerated violently on ice. High speed movies of the joints disclosed that centrifugal force was swelling the seals at these speeds to almost double their size, permitting scuffing against suspension parts. The seals were revised to run at any attainable speed without distortion by further changes in thickness, hardness, and shape and by the addition of retaining bands on the outboard boot.

Rear Suspension Has Single-Leaf Springs, Four Shock Absorbers

To take maximum advantage of the added space allowed by front wheel drive, tapered section, single-leaf rear springs (Fig. 7) are used to increase rear seat room and trunk space. The springs are mounted with a silent-block type

Fig. 7—REAR SUSPENSION. The Toronado rear suspension features single-leaf springs and a combination of horizontal and vertical shock absorbers. The position of the rear suspension relative to the frame is shown at the right.

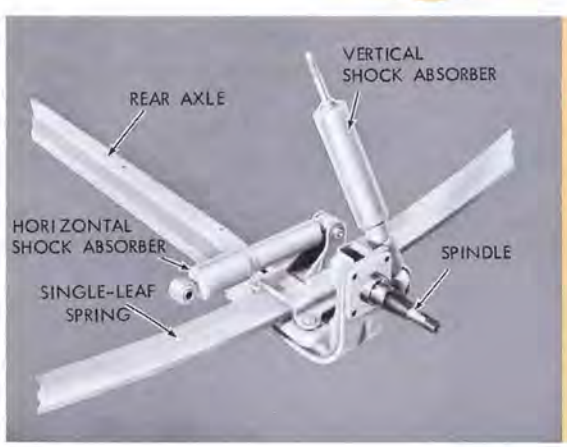

bushing in the front eye at the frame bracket, and a rubber shackle bushing at the rear eye and body.

The ride control shock absorbers have a bayonet-type mounting at the body. This provides isolation and a cushion that reduces road shocks to a low level for a quiet and soft ride. A shock angle of 25° forward and inboard from the vertical is preferred for overall operational control.

An unusual and highly beneficial departure in rear suspension design is the addition of horizontally mounted fore and aft rear shock absorbers. This dual arrangement permits valving for excellent control of both vertical ride motion and fore and aft axle motion without the compromise usually associated with single shock absorbers.

The rear axle housing is a hat-shaped stamping reinforced on the ends to absorb brake loads and provide mounting for the forged wheel spindles. Tapered roller bearings are used at the wheel hubs.

The final selection of such items as balanced front and rear spring rates, shock absorber valving control, and body and engine mountings were the result of concentrated ride and handling programs at the General Motors Proving Grounds and in remote areas of Arizona and Michigan.

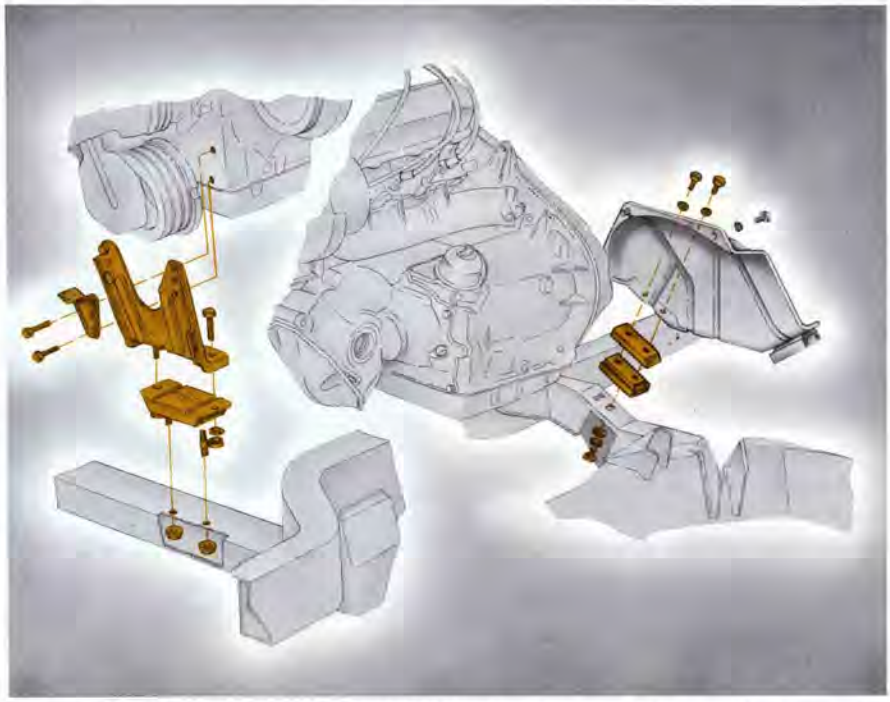

Fig. 9—ENGINE-TRANSMISSION MOUNTINGS. The engine-transmission assembly is mounted to the frame through one front and two rear mounts.

Other Components Also Feature New Designs

In addition to the frame, front and rear suspension systems, and front axle, other components of the Toronado chassis were designed to meet the needs and take advantage of the front wheel drive vehicle concept. These included the brake system; engine and transmission mountings; fuel, exhaust, and steering systems; and wheels and tires.

Fig. 8—BRAKE DRUM DESIGN. One early brake drum design concept (left) featured the drum mounted on the hub with the wheel bolted directly to the drum. The final brake drum is a cast iron, finned design (right) with cooling provided by air flow through openings in the wheel spider (Fig. 12). The wheel is attached to the hub in the conventional manner.

Brake System

Early in the Toronado design program several brake designs were built and evaluated with the objective of attaining the utmost in braking for the car's overall requirements. The best combination was an improved drum type.

The reduced scrub radius (distance from the king pin center to the center of the tire measured on the ground) requirement for front drive necessitated deep set drums and brake assemblies which, in turn, dictated the use of a high offset wheel. This resulted in less heat rejection from the brake to the air stream inboard of the wheel in the conventional manner. In one design (Fig. 8-left) drums were mounted to the hubs on a five-in. diameter bolt circle, and the wheels were bolted to the drum with eight studs on a 10-in. diameter bolt circle. The open-spider wheel provided outboard drum exposure for cooling. This concept was tested using both cast iron and aluminum drum materials. Due to roughness problems and appearance limitations, this design was abandoned in favor of cast iron drums and wheels attached at the hub by five studs in the conventional manner (Fig. 8-right). Drum cooling is accomplished by air flow through ten large openings in the wheel spider adjacent to the finned outer periphery of the

drums. This design resulted in improved heat rejection with excellent fade and wear characteristics. In addition, the extremely small scrub radius has resulted in excellent stability and freedom from pull.

With the basic design settled, an extensive development program to optimize wheel cylinder and master cylinder size, brake lining compound, and details of drum finish resulted in a highly effective, safe, and well-balanced brake system for the Toronado.

Engine and Transmission Mounting

In the original Toronado design, dual front engine mounts were used with a single rear mount. This arrangement ultimately proved unsatisfactory because of the lack of response to tuning. Increasing the rate of the front mounts reduced shake, but produced much higher impact and harshness levels. Changes in the single rear mount had little effect on shake or harshness.

As the result of work done by the Structure and Suspension Development Group of the GM Engineering Staff, the mounting was reversed to use a single center front mount with dual rear mounts spaced 14 in. apart and inclined at 30° (Fig. 9). This greatly reduced torsional shake without increasing impact because the torsional forces were carried into the frame in a rigid area. Restrictors for fore and aft engine movement proved most effective at the two rear mountings. Lateral restriction was added later at these supports to control road induced cross shake.

Fuel and Exhaust Systems

The fuel system design used in the Toronado is conventional. The fuel line is routed outboard of the frame side rail, well separated from exhaust heat, to avoid vapor lock. A fuel return system is used with air conditioning.

A dual exhaust system for maximum performance is standard equipment (Fig. 10). The system uses dual exhaust pipes with a single, cross-flow muffler and dual resonators. Aluminum coated steel and stainless steel are used on the parts subject to corrosion to provide satisfactory life.

Unlike a conventional drive system, the the primary roll movement of the Toronado engine-transmission-differential assembly is a fore-and-aft pitch, with an axis of rotation about the centerline of the lateral drive axles. This is 90° to the

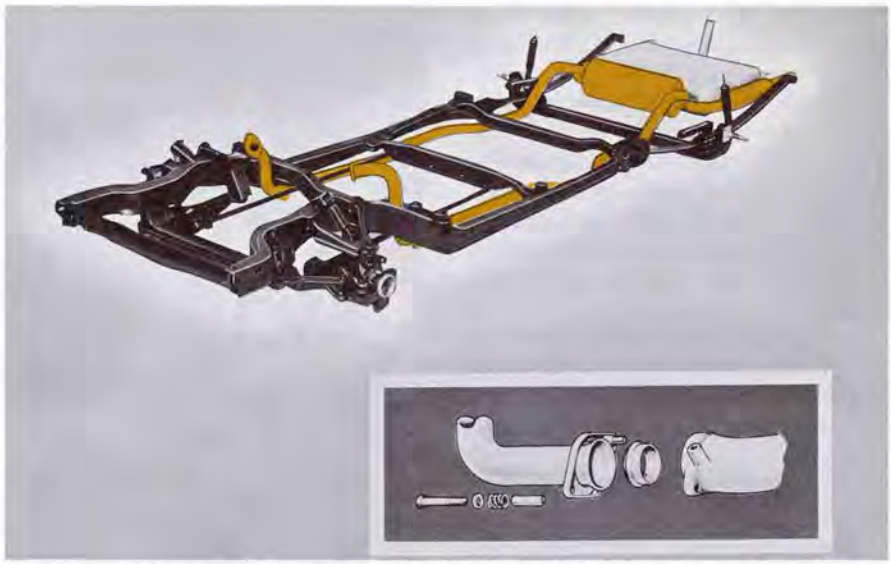

Fig. 10—EXHAUST SYSTEM. The Toronado features a dual exhaust system incorporating a single cross-flow muffler. A spherical, flexible coupling (inset) provides the manifold-exhaust pipe connection.

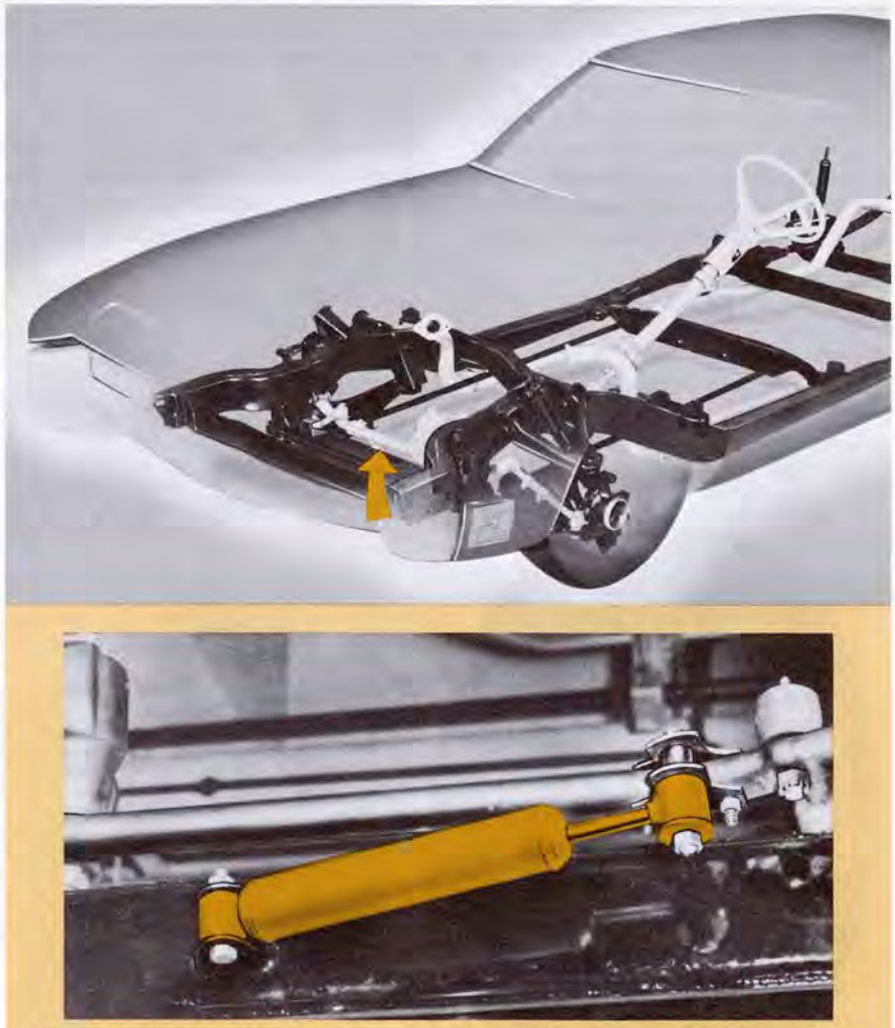

Fig. 11—STEERING SYSTEM. Power steering is standard equipment on the Toronado. The steering system includes a shock absorber connection (bottom) between the linkage and the vehicle frame.

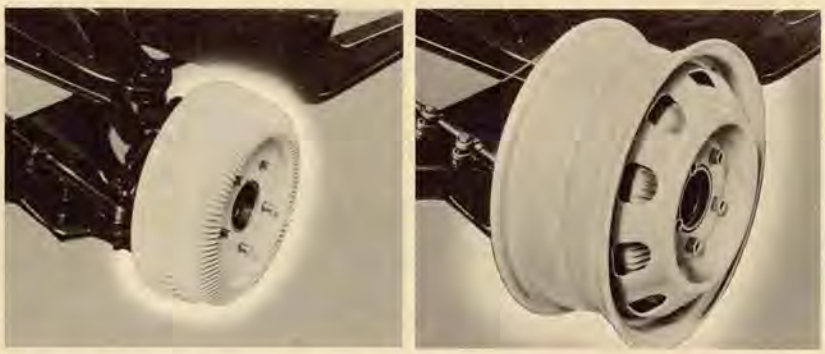

Fig. 12—TORONADO WHEEL DESIGN. The Toronado wheel design incorporates a slight offset to accommodate the cast iron, finned brake drum, shown attached to the hub at the left. The wheel spider (right) has ten modified round holes which permit air cooling of the brake drum.

engine roll reactions of a rear drive car. Therefore, a spherical flexible coupling is used at the manifold-to-exhaust pipe connection to allow freedom of power train reaction during forward and reverse torque application (Fig. 10-inset).

Steering System

Power steering is standard equipment on the Toronado (Fig. 11). The integral hydraulic power gear unit is mounted horizontally in the chassis to provide a vertical pitman shaft and horizontal relay rod motion throughout the full turn displacement. The flat gear position required a universal joint at the intersection of the steering column shaft to obtain a satisfactory steering column angle.

Wheels and Tires

A wheel having 3¼-in. offset (the distance from tire center to wheel mounting face) was dictated by the reduced scrub radius and deep set brake drums of the Toronado. The wheel offset of Oldsmobile's rear drive cars is less than one in. The brake drum exposure to the unobstructed inboard air stream, therefore, is nearly three in. greater than that afforded by the Toronado brake-to-wheel relationship. In the Toronado design, it was recognized that brake drum cooling must be accomplished from the outboard side of the wheel. Consequently, a development program was begun to determine the optimum brake cooling effect that could be accomplished with holes in the wheel spider.

Tests consisted of variations from five rectangular shaped holes to sixteen round holes. Brake cooling requirements were established at a minimum air passage opening of 30 sq in. A series of laboratory, Belgian block road, and J turn tests followed to determine the shape and number of holes required in the spider to accomplish the best wheel durability and brake cooling. The Toronado wheel (Fig. 12) with ten modified round holes was the end result of this development program.

The 8.85 × 15 T-FD (Toronado-Front Drive) tire was selected after extensive evaluation in such areas as handling, ride, tractive ability, and appearance. Early Toronado chassis development was done using 8.00 × 15 standard profile tires. The first 8.85 × 15 low profile tires of conventional bias cord construction, when evaluated on the Toronado, exhibited substantial gains in handling and response due to their larger footprint on the road. Further modification of tread design and sidewall stiffness gave fine overall tuning to the car.

Tire wear on the Toronado averages about the same as that on production rear drive cars except the ratio between front to rear wear is greater. However, the regular 6,000-mile tire rotation evens this out satisfactorily. It is not necessary to rotate the spare tire.

Higher Spring Rate Improves Ride

The ride of the Toronado was developed with two objectives in mind. The first was to provide adequate firmness and roll control to satisfy high performance handling. The second was to produce a comfortable ride with sufficiently slow motions to qualify as a good riding car, well balanced, and with a minimum of float.

Wheel deflection rates of the Toronado are 89 per cent higher at the front wheels and 57 per cent higher at the rear wheels than a comparable weight rear drive Oldsmobile. Equivalent wheel rates in a conventional car result in uncomfortably quick ride motions and hard impact on bumps. The final ride and handling development of the Toronado has resulted in a very soft ride with high wheel and spring rates.

Early design front torsion bar rate was 450 in-lb per deg, resulting in a front wheel rate of 150 lb per in. of deflection. Original rear springs gave a rear wheel rate of 130 lb per in. of deflection. Shock absorber valvings of conventional values, when combined with these relatively high wheel rates, gave uncomfortable pitching motions. A series of shock absorber valving revisions in the direction of increased control was ineffective in obtaining desired ride and balance. However, an increase in front wheel rate to 162 lb per in. and a correspondingly greater rear wheel rate of 157 lb per in. produced the basis for effective shock absorber control to perfect the Toronado ride and balance to a pleasing level.

In addition to the beneficial effects on handling and roll control, another advantage in the high spring rate combination is the relatively small change in car height between curb and five-passenger loads. This provides a desirable show room appearance and functional gain in that the higher spring rates reduce the possibility of bottoming out of the suspension.

Summary

Taking advantage of new design possibilities afforded by the front wheel drive configuration, Oldsmobile engineers have produced a chassis for the 1966 Toronado that includes several innovations. A new sub frame permits a frame-integral rear construction for maximum use of space. The front wheel drive required new front axle and universal joint designs, as well as new front suspension design. The Toronado front suspension design incorporates torsion bars, while the rear suspension design features single-leaf springs and four shock absorbers.

These and other new chassis design features provide the Toronado with excellent directional stability, drive traction, ride, and handling.

A Design Summary of the Toronado Engine

By FRANK W. BALL
and LLOYD T. GILL
Oldsmobile Division

425-cu in. V-8 engine modified for front wheel drive concept

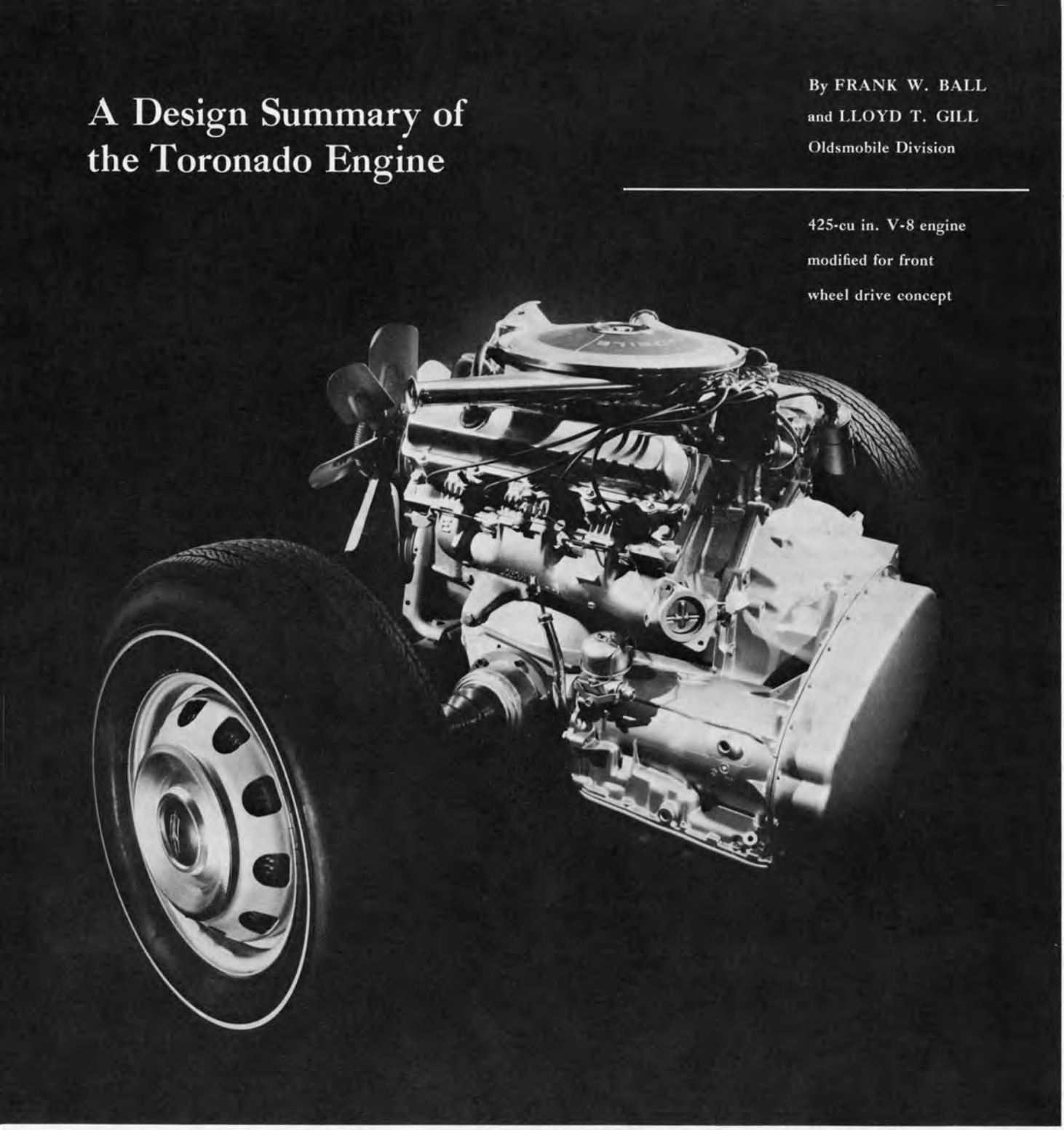

Engineers in Oldsmobile Division's engine group had the responsibility of developing a high-performance engine suitable for the 1966 Toronado. This engine had to be capable of providing the required performance for a full-size, front wheel drive vehicle equipped with an automatic transmission and accessories having high power consumption. By modifying Oldsmobile's 425-cu in. Rocket engine, engineers designed a powerplant that met all the requirements of performance and space limitations.

Two factors influencing the design of the Toronado engine were performance and physical size. The performance criteria dictated an engine of maximum power, and the existing Oldsmobile 425-cu in. Rocket V-8 engine was selected as the powerplant. The physical size of the engine was limited by the Toronado's low hood, vehicle frame, steering mechanism, drive shafts, front suspension parts, and transmission-differential assembly. Both the performance and size factors were accommodated by making various modifications in the basic engine design, using existing components wherever possible.

The final design of the Toronado engine (Fig. 1) is particularly well adapted to power this new type vehicle.

Environment Required Engine Modifications

The front wheel drive design dictated that the 425-cu in. engine be positioned at a higher elevation than in Oldsmobile rear wheel drive cars using the same size engine. This elevated position, plus the low hood profile of the Toronado, resulted in a 2.6-in. decrease in the vertical height available for the air cleaner and silencer assembly, carburetor, and intake manifold. To provide for this decreased height, the air cleaner and silencer assembly was reduced 1.4 in. in height and the carburetor mounting pad on the intake manifold was lowered 1.2 in. The height reductions imposed restrictions on these components which required careful attention to all aspects of design and development to maintain a high level of engine performance and quality.

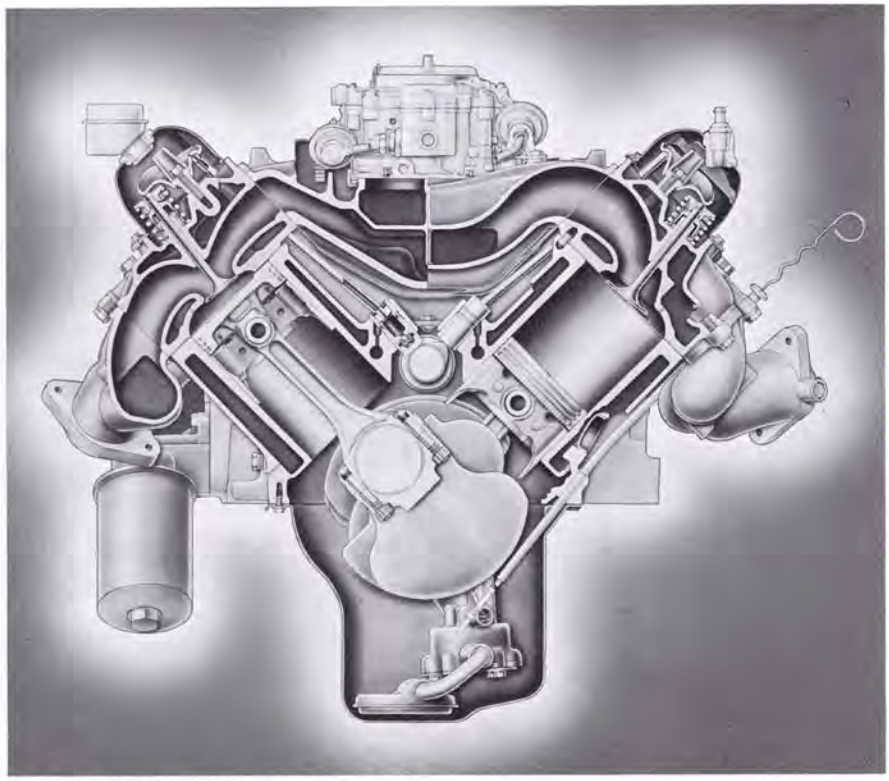

Fig. 2—TRANSVERSE CROSS SECTION OF TORONADO ENGINE. One of the modifications made to the standard 425-cu in. Rocket engine was a redesign of the camshaft to provide higher valve lift and a longer duration of opening for both the intake and exhaust valves.

Fig. 1—TORONADO ENGINE. The standard Oldsmobile 425-cu in. Rocket V-8 engine was modified for application to the Toronado. Various changes were made in the basic engine design to provide for increased performance and to meet space limitations dictated by the unitized power package concept and the low hood profile.

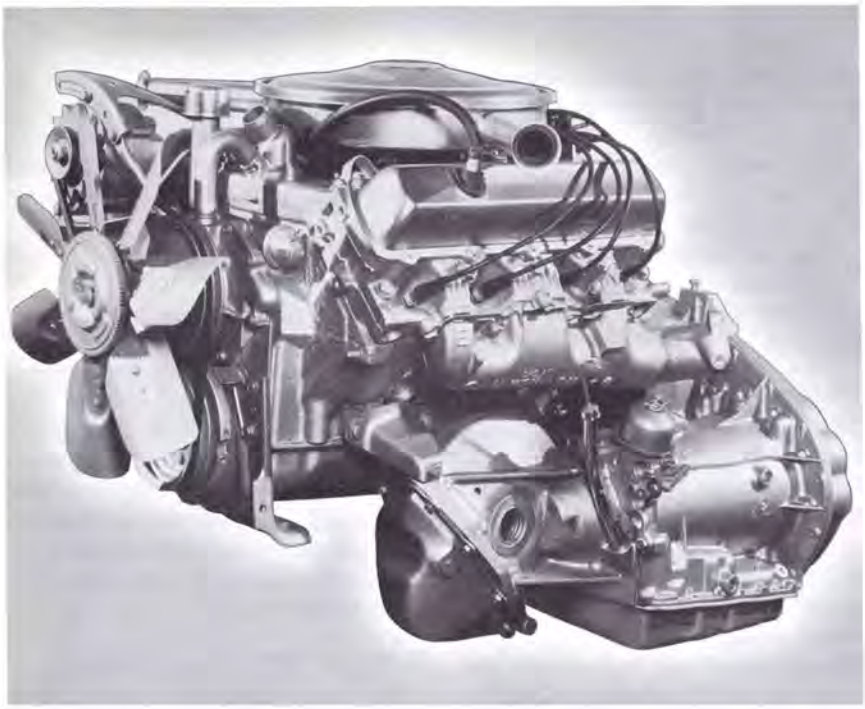

Air Cleaner and Silencer Assembly

One air cleaner and silencer assembly considered for the Toronado engine was an adaptation of a 1959 Oldsmobile design. The vertical height gave adequate clearance at the inner panel of the hood but the diameter of the assembly was too large to fit between the ignition distributor cap and the water outlet of the cooling system. A special side outlet distributor cap would have been required along with a new water outlet design having a separate water by-pass hose connection. To avoid these changes a smaller diameter design was developed for the assembly.

The production version of the air cleaner and silencer assembly consists of a resin treated paper filtering element, top plate, bottom plate, and two air inlet snorkels. The outside diameter of the assembly is the largest that could be fitted between the distributor cap and water outlet. The height fills the space between the valve covers and the inner panel of the hood. Maximum use of available space provided adequate silencing. Additional silencing was provided by the two tapered snorkels. The two snorkels also assured

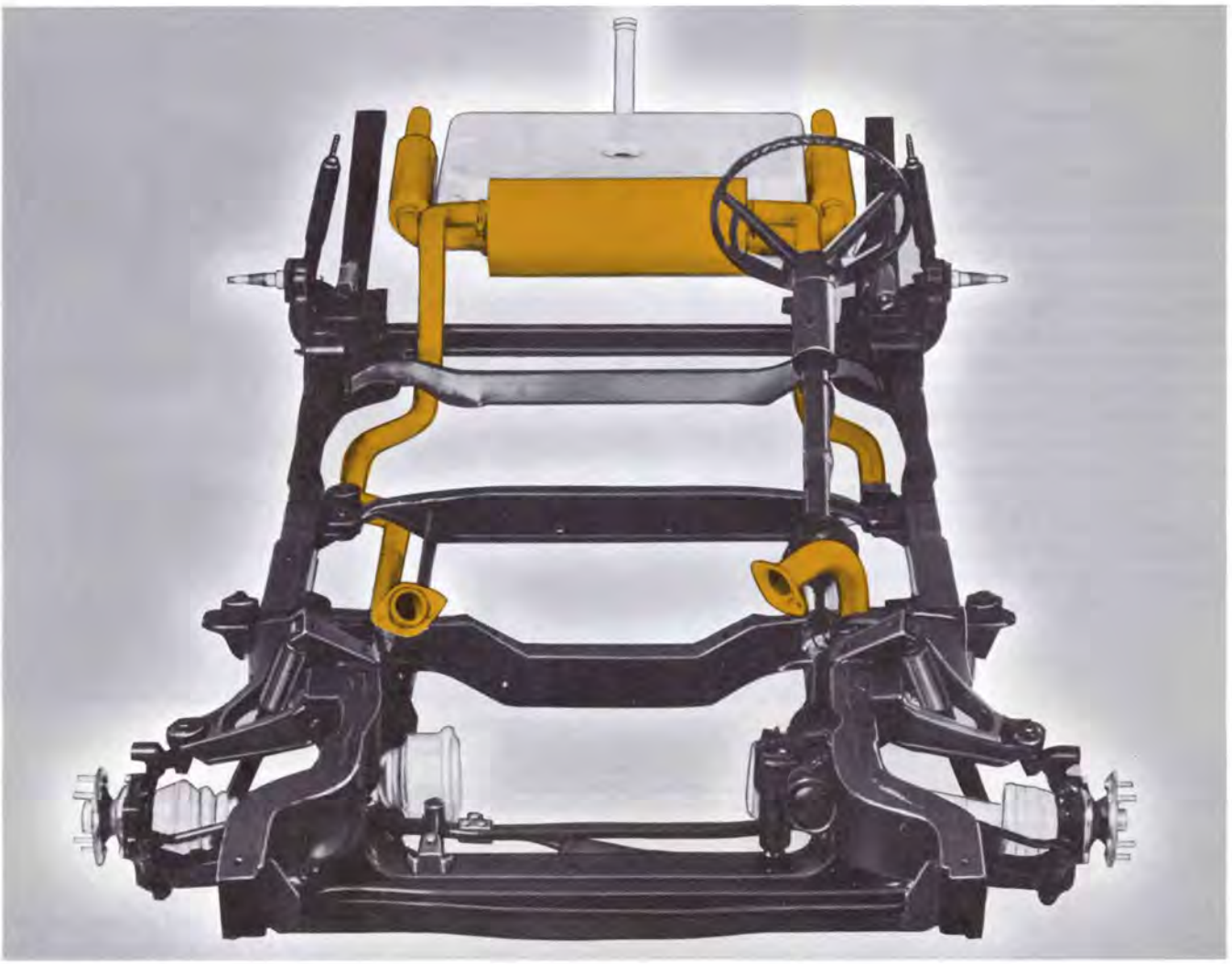

Fig. 3—TORONADO ENGINE EXHAUST SYSTEM. The exhaust manifolds used on the standard 425-cu in. engine were revised to provide for frame clearance on the Toronado. The exhaust pipes lead to a single muffler positioned transversely in the frame. Twin tail pipes are used.

sufficient air flow into the engine. Although the bottom plate of the air cleaner is deeply dished to clear the carburetor, air flow is not impeded.

Carburetor

An important factor that helped meet the overall height restrictions of the air cleaner, carburetor, and inlet manifold was the application of the Quadrajet carburetor developed by the Rochester Products Division. This four-barrel carburetor was designed to provide a lower overall height, but still provide adequate vertical distance to assure proper venturi efficiency, good fuel and air mixing, and a small, deep fuel reservoir.

The Quadrajet has 1.375-in. diameter primary bores and 2.250-in. diameter secondary bores. The primary bores are smaller than those in the usual four-barrel carburetor, which contributes to a thorough mixing of the air and fuel mixture because of higher venturi velocities for better fuel economy. The secondary bores are larger than usually found and permit unrestricted breathing for maximum power.

Intake Manifold

The intake manifold presented a difficult design assignment. The lowered carburetor pad required careful evaluation of the new branch contour to avoid restrictions and abrupt changes in air-fuel mixture flow patterns. The performance of the new design was verified by dynamometer testing.

The intake manifold branch area was increased from 2.50 to 2.60 sq in. and the longitudinal runners were increased in cross sectional area from 2.67 to 3.40 sq in. These increases, together with smooth branch design, resulted in a substantial reduction in intake manifold air friction losses.

Accessory Brackets

The low hood of the Toronado also had an effect on the amount of space available for the brackets holding belt driven accessories and required their redesign. The brackets (for accessories such as the air conditioning compressor and power steering pump) had to be made very rigid and braced with struts to secure a minimum frequency of 200 cps. This is the minimum frequency necessary to avoid resonance at all engine speeds.

Starter, Oil Filter

To accommodate the transmission-

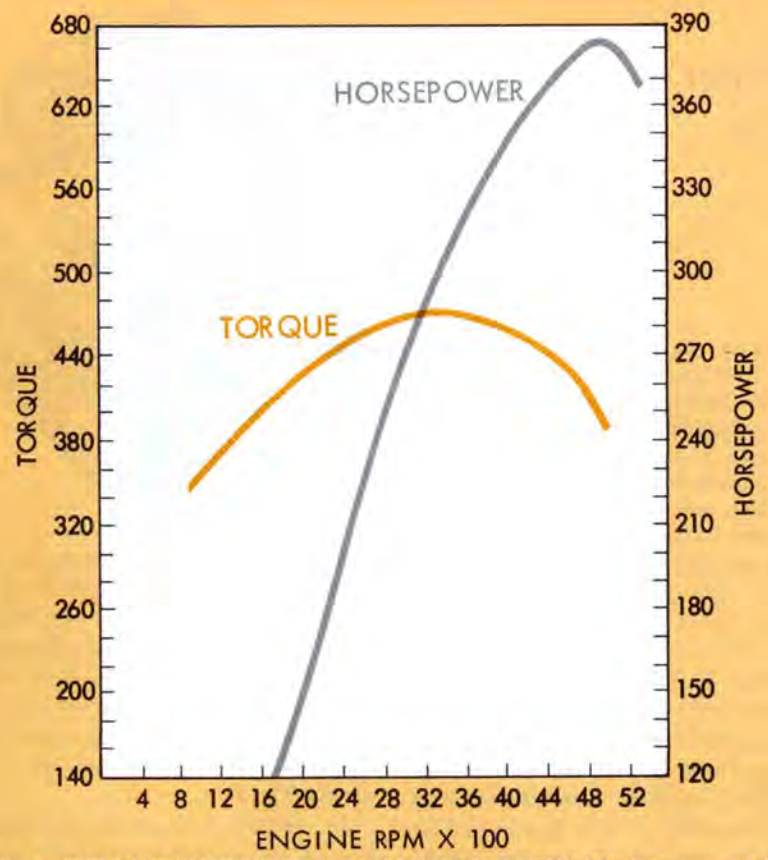

Fig. 4—TORONADO HORSEPOWER AND TORQUE CURVES. The data represented by these curves were obtained through Standard Test No. 20 of the General Motors Automotive Engine Test Code. This test establishes a uniform method of determining the gross power output of the bare engine. It is run with distributor and carburetor adjusted for maximum power at each speed. Data are corrected to 60 F using an S.A.E. correction factor.

differential assembly positioned along the left side of the engine, changes had to be made in the location of the starter and oil filter base. The starter was moved to the right side and attached to the flywheel housing, instead of the cylinder block as in other Oldsmobile engine designs. A new oil filter base was designed to provide clearance between the filter and the starter.

Oil Pan

One interesting aspect of the engine modification program was the design and development evolution of the oil pan. The differential drive shaft, which extends transversely under the engine center main bearing, presented an interference with the oil pan normally used on the standard 425-cu in. engine. An early design used a welded-in tube that allowed the drive-shaft to extend through the oil pan. Oil was returned easily to the sump at the rear by running down the inclined surface under the tube. During rapid deceleration and down-hill operation, however, the oil surged forward and a foaming condition was created by the moving connecting rods. Also, under forward surge conditions the oil pump inlet was opened to the atmosphere and the hydraulic valve lifters leaked down due to air in the oil. The welded-in tube also presented a potential oil leak problem.

Using the experience gained from the earlier design, a new design was developed which had the oil pan formed over the top of the drive shaft. This new design solved the problem of oil rushing forward out of the sump. Excessive amounts of oil, however, still collected in the forward half of the oil pan due to normal throw-off and the foaming problem still persisted. A drain hose installed between the front section and the sump did not provide sufficient capacity due to the low pressure head. A larger diameter hose would have been a source of potential oil leaks.

The oil throw-off patterns of the later design were observed through a transparent pan. These observations formed the basis for the final oil pan design. The production oil pan contains stamped baffles that act as skimmers for the oil throw-off from the four front connecting rods and a trough to conduct oil thrown by the rods back to the sump. A special front bearing cap baffle was added to prevent the front connecting rod from throwing oil into the timing chain cavity.

Other Modifications Improved Performance

Other aspects of engine design were investigated to increase the output of the standard 425-cu in. engine. Engine breathing capacity was especially important and was investigated from air cleaner to tail pipe.

A new camshaft was designed that provides a higher valve lift as well as a longer opening duration for both intake and exhaust than the camshaft on the standard engine (Fig. 2). A substantial improvement in breathing capacity was realized by opening the valves at a higher rate. The increase in acceleration and deceleration resulted in the valves being opened wider for a longer period of time to provide improved aspiration. The valve lift for both intake and exhaust valves was increased to 0.472 in. The intake valve head diameter was increased by 0.06 in.

The new camshaft design, however, resulted in the point of contact between the cam and hydraulic valve lifter being too close to the edge of the 0.843-in. diameter lifter. To assure adequate surface for cam contact, a new valve lifter having a 0.921-in. diameter was used. The valve lifter angle was tilted three degrees away from the centerline of the cylinder to provide space for production tooling of the larger lifter hole in the cylinder block.

The exhaust system for the Toronado consists of large cross-sectional area exhaust manifolds, dual pipes to a single muffler, and twin tail pipes and resonators (Fig. 3).

The careful attention to breathing capacity paid off handsomely. Horsepower peaks at 385 at 4,800 rpm and the torque levels off at 475 lb-ft at 3,200 rpm (Fig. 4).

Summary

By modifying the Oldsmobile 425-cu in. V-8 engine to meet the environmental requirements of a front wheel drive vehicle, Oldsmobile engineers provided the Toronado with an engine well-adapted to the unitized power package concept. Additional modifications to the standard engine resulted in increased output to meet desired performance characteristics.

Development of the Power Transmission System for the 1966 Toronado

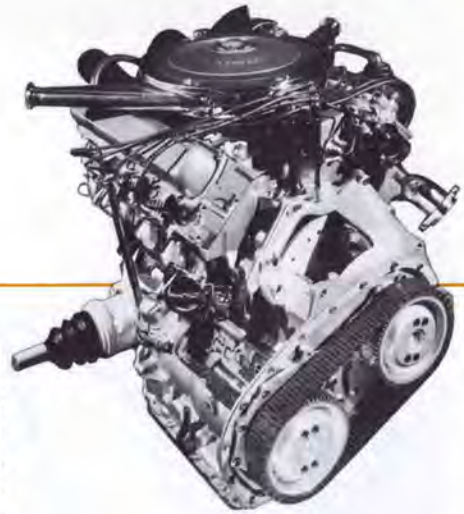

A significant design challenge in the Toronado program was the development of a method for transmitting power from the engine to the front axles smoothly and automatically. To meet these criteria, Oldsmobile engineers provided the Toronado with a fully-automatic, three-speed torque converter transmission and a final drive incorporating a spiral bevel pinion and special planetary gear differential design. A major design consideration in the transmission was the requirement of transferring power from the rear of the engine forward to the final drive unit. This was met by a chain and sprocket assembly cross-drive between the torque converter and the rear section of the transmission. The final designs of the transmission and final drive unit provide the Toronado with quiet, smooth, and durable power transmission.

THE transmission in the Toronado is a unique adaptation of a fully automatic, three-speed torque converter unit. In function and controls, it is basically the same as Oldsmobile's three-speed Turbo Hydra-matic drive. In construction and method of power transfer, however, it is completely new.

The Toronado's engine is situated in a longitudinal position. The direction of power flow leaving the engine from the rear is reversed 180° so that driving torque can be applied directly to the front wheels. In effect, this is accomplished by dividing a standard automatic transmission into two sections (Fig. 1). The first section—the torque converter—is coupled to the engine crankshaft. The second section, containing the planetary gear set and control elements, is rotated 180° and positioned beside the converter housing with the power output section of the transmission facing toward the front of the car. A chain and two sprockets transmit power flow from the converter to the planetary gear sets. A differential unit, connected to the end of the transmission, transmits engine torque to the front wheels (Fig. 2).

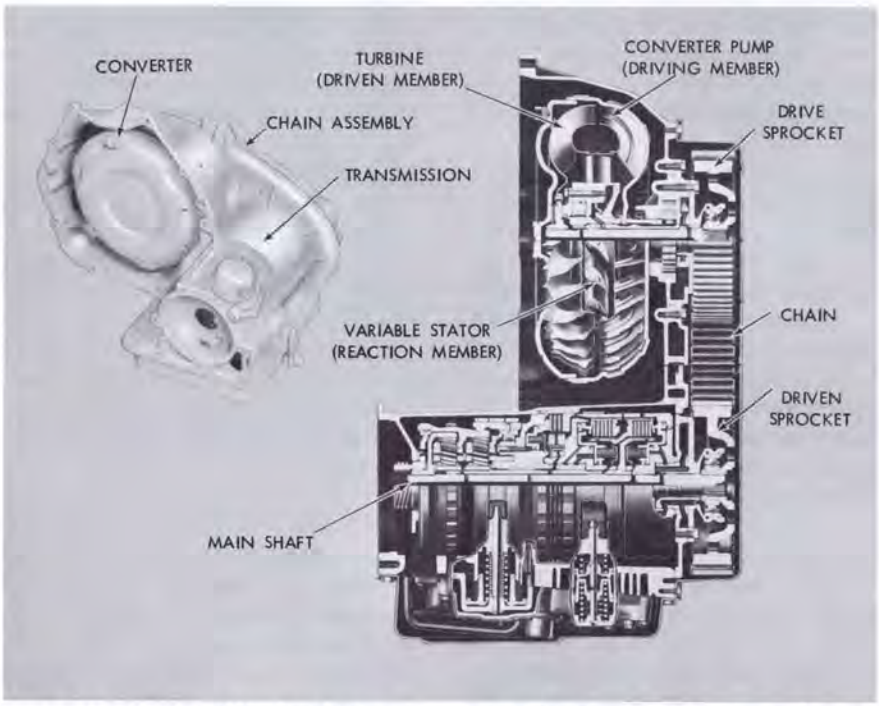

Fig. 1—TORONADO TRANSMISSION. The transmission in the front wheel drive Toronado is split into two sections. The first section—the torque converter—is attached to the engine crankshaft. The rear section, containing planetary gearing and control elements, is rotated 180° to transfer power forward to the final drive unit. These two sections are connected by a chain and sprocket cross-drive assembly.

As with all new automatic transmissions, a great number of durability and calibration problems existed which were solved during the development of the final Toronado transmission design. These were not unique to a front wheel drive transmission, however. Since many papers have been written on this type of automatic transmission engineering, the remaining portion of this discussion will deal only with the development of the chain and sprockets, whose existence and design resulted from this special application to a front wheel drive car.

Chain and Sprockets Reverse Direction of Power Flow

Because engine power had to flow forward in the Toronado, a cross-drive was needed between the rear of the engine and the transmission gears located beside the engine. This was done with a chain and two sprockets. It became apparent at the outset of the design program that a durable but quiet chain was essential and that a concentrated effort would be needed at both the Hydra-matic Division and Oldsmobile Engineering to meet both requirements.

The chain and the drive and driven sprockets (Fig. 3) are enclosed in a stamped sheet metal cover that is bolted to a die cast aluminum torque converter and transmission case. Both sprockets

By THOMAS J. KRIEG
and HARRY H. LYON
Oldsmobile Division

Chain cross-drive, final drive components key to front wheel drive

have 65 teeth of 3/8-in. pitch, are 7.6 in. in diameter, and rotate at converter turbine speed. The chain is root guided on both sprockets.

Drive Sprocket

The drive sprocket is connected directly to the converter turbine through a splined shaft. The shaft and sprocket assembly is held in position by a ball bearing pressed onto the shaft and housed in a cast iron support bolted to the rear of the transmission. The teeth on the sprocket casting are ground so that the required close control of root diameter and surface finish is attained. One of four different diameter sprockets is selected in production to control the installed chain slack.

Driven Sprocket

The driven sprocket is the input to the controlling elements and planetary gear set of the transmission. The driven sprocket is splined through a shaft into the forward clutch drum of the transmission and is supported in the same manner as the drive sprocket. The driven sprocket teeth also are ground.

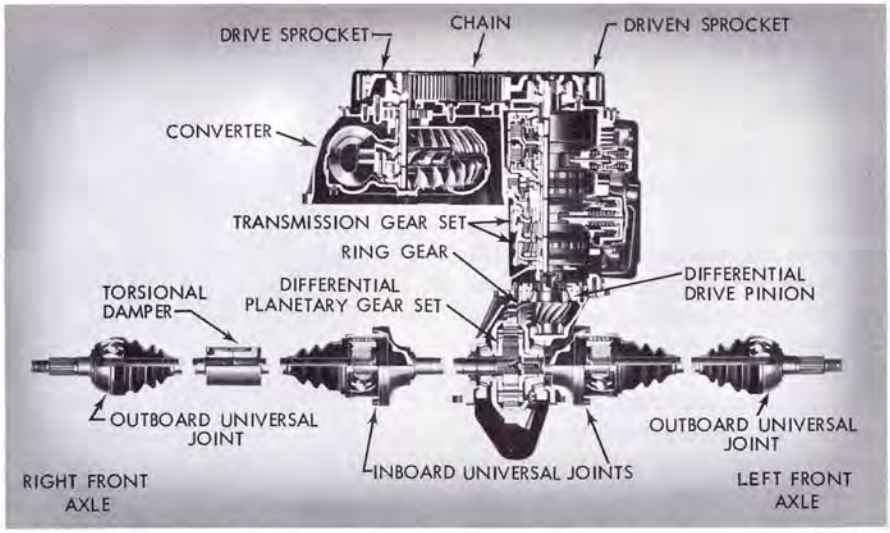

Fig. 2—TRANSMISSION-FINAL DRIVE. A planetary gear differential unit is attached to the end of the transmission through which power is transmitted to the front wheels.

Chain

A silent type chain is used, as opposed to a roller type, and is similar in construction to that used in engine timing chains. The type of generated link design used provides a smooth engagement of the chain link onto the sprockets and allows the links to assume the load gradually.

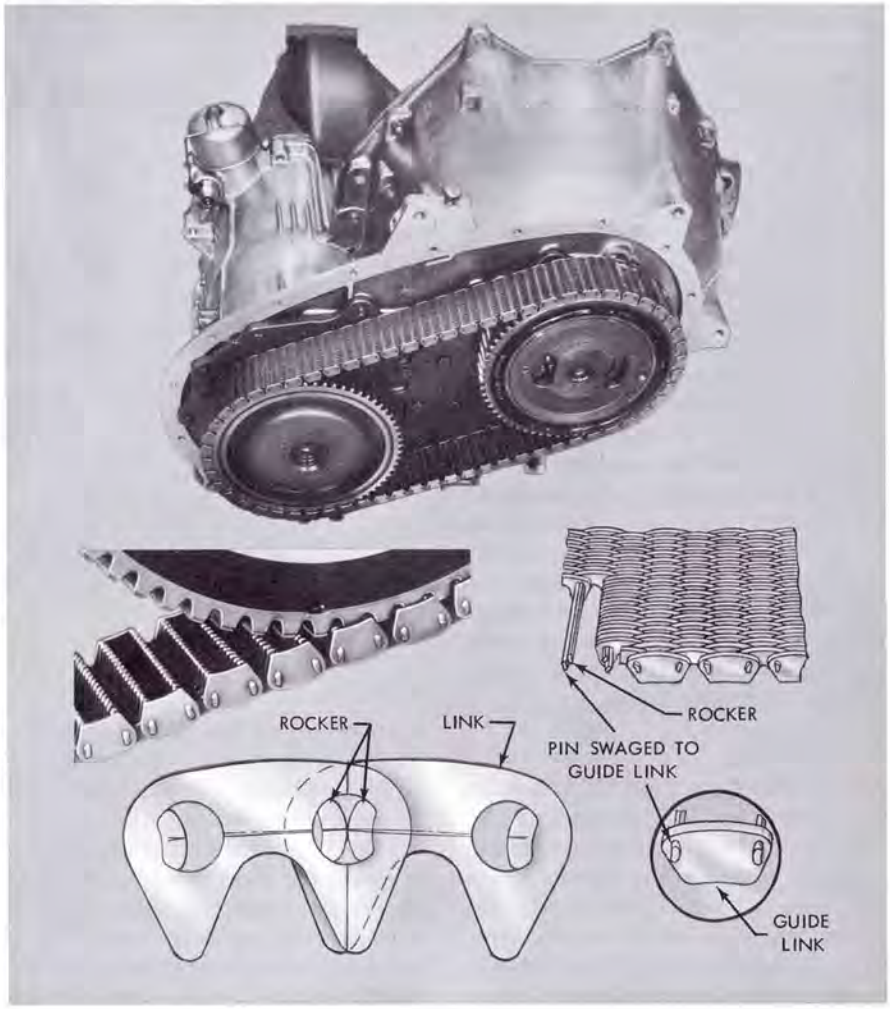

Fig. 3—CHAIN ASSEMBLY AND SPROCKETS. The chain and the drive and driven sprockets, shown at the top with the protective cover removed, transmit power flow from the torque converter to the planetary gear sets in the transmission. The generated link chain design provides smooth engagement between chain and sprockets (center) and allows the links to assume load gradually. The load in the chain is transmitted from the link tip through the aperture openings and into the next link across the pin and rocker (bottom). A link never carries load across its tips. The chain has an average pitch of 0.375 in., a total length of 46.5 in., and a width of 2.0 in. The chain is held in its fore and aft position on the sprockets by 124 guide links located on both sides of the assembly. The pins are staked in the guide links to hold the assembly together. The chain assembly has 2,294 separate pieces each of which must be made accurately and assembled carefully to give correct average pitch and length.

This eliminates impact and chordal action (rise and fall of each chain pitch as it engages the sprocket) which is present in other designs.

Chain Noise Was Major Consideration

From the time Hydra-matic Division was given the responsibility of designing and producing the automatic transmission for the Toronado, a great deal of time and effort was invested by both Hydra-matic and Oldsmobile to develop a quiet chain drive. Initial investigations were made by Hydra-matic on sprocket tooth and chain link shape.

The first parts made were 3/8-in. pitch with a pressure angle of 33° on both chain and sprockets. Parts were made and tested which varied the pressure angles to as low as 22° on both pieces. Other investigations were made using a pitch of 1/2 in. Combinations were tested using a pressure angle on the sprocket tooth different from that on the chain link. Evaluations for noise were made on these various combinations of parts, and the pressure angle was reduced to 25° on both the sprocket tooth and chain link. The pitch remained at 3/8 in. The sprocket tooth profile was a true involute in the contact area between the link and sprocket tooth; the chain was flank guided on both sprockets. Although the noise level was improved at this point, it still was unsatisfactory and another development path had to be pursued.

The noise transmitted to the car was high pitched, in the frequency range of 1,000 to 1,500 cps. It was present in all gears up to 50-mph car speed with a resonant peak at 37 mph in third gear. The magnitude of the noise increased at wider throttle openings. A test car with an experimental transmission was studied in the laboratory to gain a better understanding of the chain drive noise, and three major areas of possible noise reduction were investigated: (a) impulse isolation, (b) impulse magnitude reduction, and (c) effective insulation.

Impulse Isolation

The noise source was sprocket tooth mesh frequency. The noise peak at 37 mph was caused by a diaphragm tilting resonance of the sprocket support assembly. Because the excitation forces went through the sprocket to the bearing housing, it was believed that effective isolation of the sprocket should decrease chain noise at least in the area of resonance. The disturbance level on the driving gear support assembly was four times that observed on the driven.

These facts led to a concentrated effort to isolate the drive sprocket teeth from the sprocket support assembly. The first attempt at this type of construction was a coil spring between the bearing and the bearing housing (Fig. 4a) which allowed

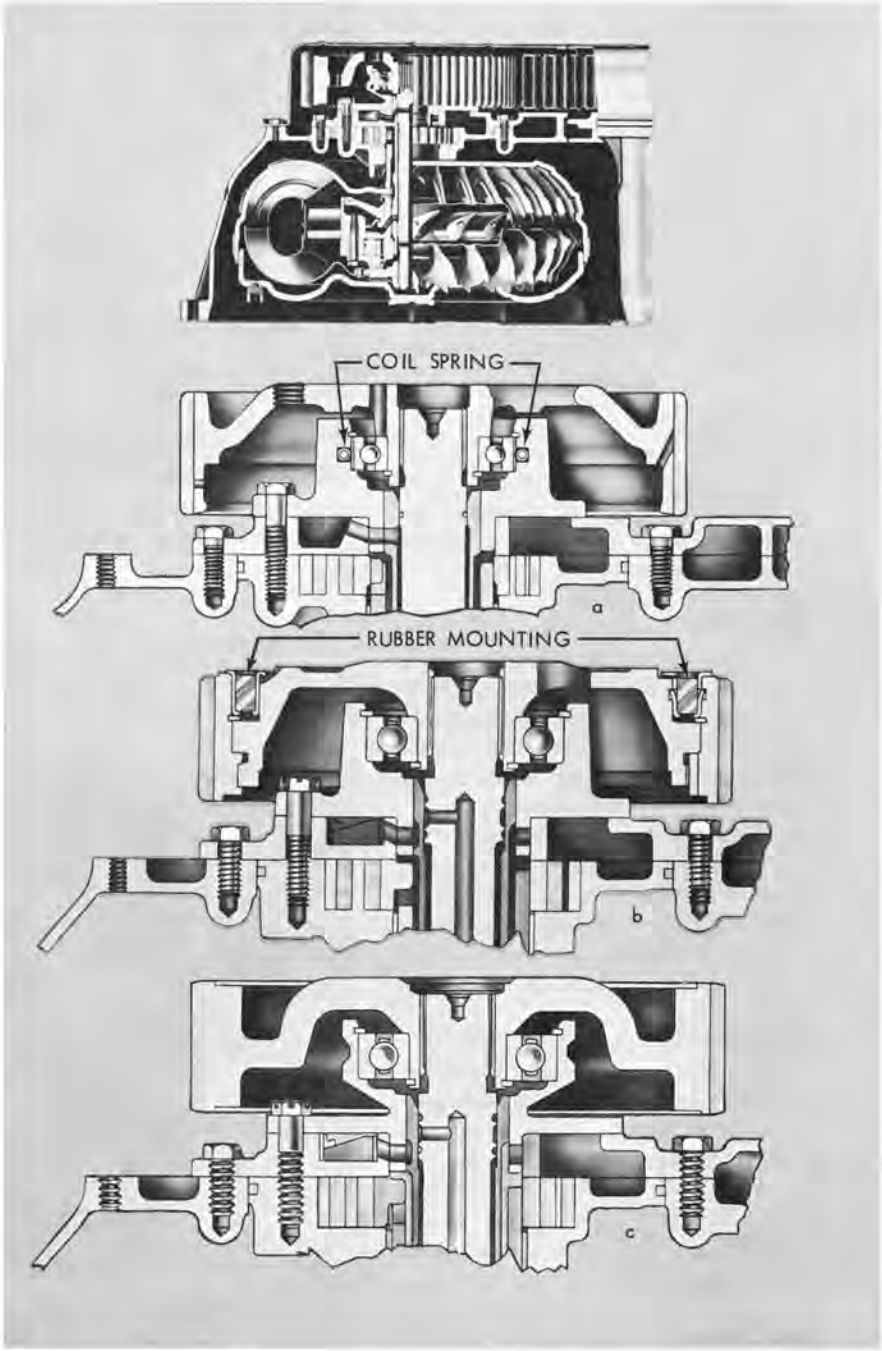

Fig. 4—DRIVE SPROCKET TEETH ISOLATION. An early attempt to isolate the drive sprocket teeth from the sprocket support assembly (top) consisted of inserting a coil spring between the bearing and the bearing housing (a). This allowed the bearing to move radially before grounding out. Another design involved mounting the outer rim of the sprocket in rubber (b), which allowed the teeth to move relative to the hub. The outer rim of the sprocket was piloted on the inner hub to restrict radial movement. The hub drove the sprocket teeth through rubber until 100 ft-lb of torque was applied. Above that, the drive was through metal lugs on the hub which fitted into slots on the outer rim. These had a clearance which allowed 0.100-in. circular travel prior to grounding out. In the final design (c), the bearing housings themselves were relieved making them flexible enough to reduce the energy transfer.

the bearing to move 0.015 in. radially before it grounded out. This design was effective in reducing the chain noise level, but because of space limitations and required low rates a durable production proposal was not feasible. The design then was changed (Fig. 4b) so that the bearing and hub remained stationary, but the outer rim was mounted in rubber to allow the sprocket teeth to move relative to the hub.

Although the isolated drive sprocket decreased the noise level, especially in the area of resonance, the restriction on radial movement due to the required pilot between the rim and the hub decreased its effectiveness. This fact led to the development of the final production design (Fig. 4c) for sprocket isolation. The bearing housings themselves were relieved, thereby making them flexible enough to reduce the energy transfer. Different combinations of constructions and rates were tried before the design was finalized to that of a cantilever with a radial rate of 180,000 lb per in. This design reduced chain noise because of its ability to absorb much of the energy imparted to it by the sprocket. With the flexible support, a two-piece drive sprocket was no longer a necessity.

Impulse Magnitude Reduction

Concurrent with the development program on impulse isolation, a parallel program was conducted to reduce the magnitude of the impulses produced by chain-to-sprocket tooth contact. This investigation finally resolved itself into a system of flank relieving on the drive side of the driven sprocket teeth. This type of alteration was very effective in reducing chain noise but, because of adverse effects on chain durability and the development of the low rate supports, the concept was abandoned prior to production. It does deserve mention, however, because of its usefulness in this type of an engineering development problem.

In the initial design, 51 of the sprocket teeth were relieved 0.018 in. on their drive side so that only 14 teeth carried load under positive torque. The 14 unrelieved teeth were located in a random pattern on the sprocket as follows: starting with tooth number 1 and counting in a clockwise direction looking at the rear of the sprocket, teeth number 1, 4, 9, 16, 22, 25, 29, 34, 37, 42, 48, 53, 57, and 60 had full tooth profiles. To make the tooth relief more effective, the sprocket was changed from a flank-guided to a root-guided design. The relieving was effective because it reduced the number of impulses per revolution which in turn kept the additive effect of tooth impulses to a minimum. The frequency of the remaining noise was the same, but the magnitude was reduced greatly.

The first tests run on the new quieter chains with the relieved driven sprocket indicated poor durability. When a chain failure occurred, a snapping noise was noticed at the wide open throttle 1-2 shift point. In an attempt to analyze the reasons for these failures, the following checks were made:

- High-speed motion pictures were taken of a chain and sprocket set which made a snapping noise under load. These pictures clearly showed that if enough torque were applied to the drive sprocket at higher rpm the chain would skip a tooth starting at the entering side of the driven sprocket and progressing around the chain until a link hit a sprocket tooth on the entering side of the drive sprocket
- A chain link free body diagram with high chain load and low speed was made (Fig. 5). It showed that only 25.25 per cent of the chain tensile load was absorbed by the first contacting sprocket tooth, and the same percentage of the remaining chain load was absorbed consecutively by each succeeding contacting (unrelieved) tooth. A similar free body link study made to include centrifugal forces acting on the chain indicated that at 5,000 sprocket rpm, only 5.7 percent of the chain tensile load was absorbed by the contacting tooth. Therefore, the maximum number of good (contacting) teeth (7) which could be in contact with the chain at any one time on the relieved sprocket could not begin to absorb the chain load, and the normal slack side of the chain tended to become loaded
- The calculated data were confirmed by making mechanical checks on a tensile test machine. The chain was wrapped 180° around a stationary sprocket, a tensile load was applied to one strand, and the amount of load still present in the other strand was measured. These data showed that the relieved sprocket could not dissipate the applied load.

After analyzing these facts, the reason for the tooth jumping was apparent. Under heavily loaded conditions, the chain began to climb the driven sprocket on the entering side and, if it was long enough, would skip a tooth. At this point the obvious steps were taken to improve the durability of the design:

- The number of relieved teeth were reduced
- The selected teeth were relieved in steps of 0.003 in. instead of having a full 0.018 in. relief. This allowed a greater number of teeth to become effective under heavier loads and the transition from one good tooth to another to be gradual.

These changes increased durability and several sets of parts completed full durability tests. However, the consistency of the design with respect to durability was not good due to differences in the rate of chain growth within production limits. The development of the low-rate sprocket supports, discussed earlier, allowed the production design to return to that of a full complement of teeth on the driven sprocket. One feature of the relieving system was retained in the final design, that of root guiding the chain on both sprockets. (The root diameter of the sprocket provides a running surface for the tips of the links in the chain assembly.)

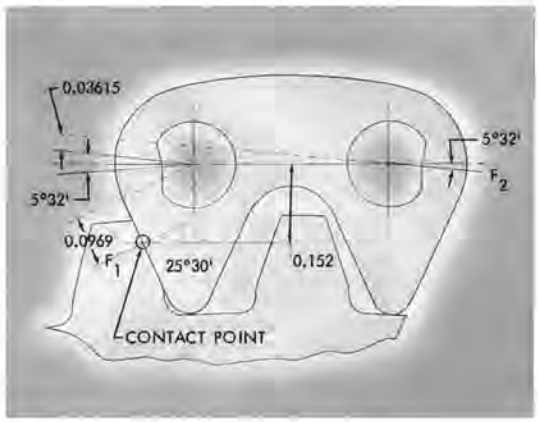

F = FORWARD PULL ON CHAIN (2,020 LB)

F_1 = TOOTH CONTACT FORCE (563 LB)

F_2 = REARWARD PULL ON CHAIN (1,510 LB)

$(0.0969)(F_1) = (0.03615)(F_2)$

$$F_1 = (373)(F_2) \quad \ldots\ldots\ldots\ldots (1)$$

$$(F_1)(\cos 25°30') + (F_2)(\cos 5°32') = (F)(\cos 5°32') \quad \ldots\ldots (2)$$

SUBSTITUTING F_1 FROM EQUATION (1) INTO EQUATION (2):

$F_2 = (0.7475)(F)$

F_2 = 74.75 PER CENT OF F.

TENSILE CHAIN LOAD F IS REDUCED ONLY 25.25 PER CENT BY CONTACT WITH TOOTH.

Fig. 5—CHAIN LINK FREE BODY DIAGRAM.

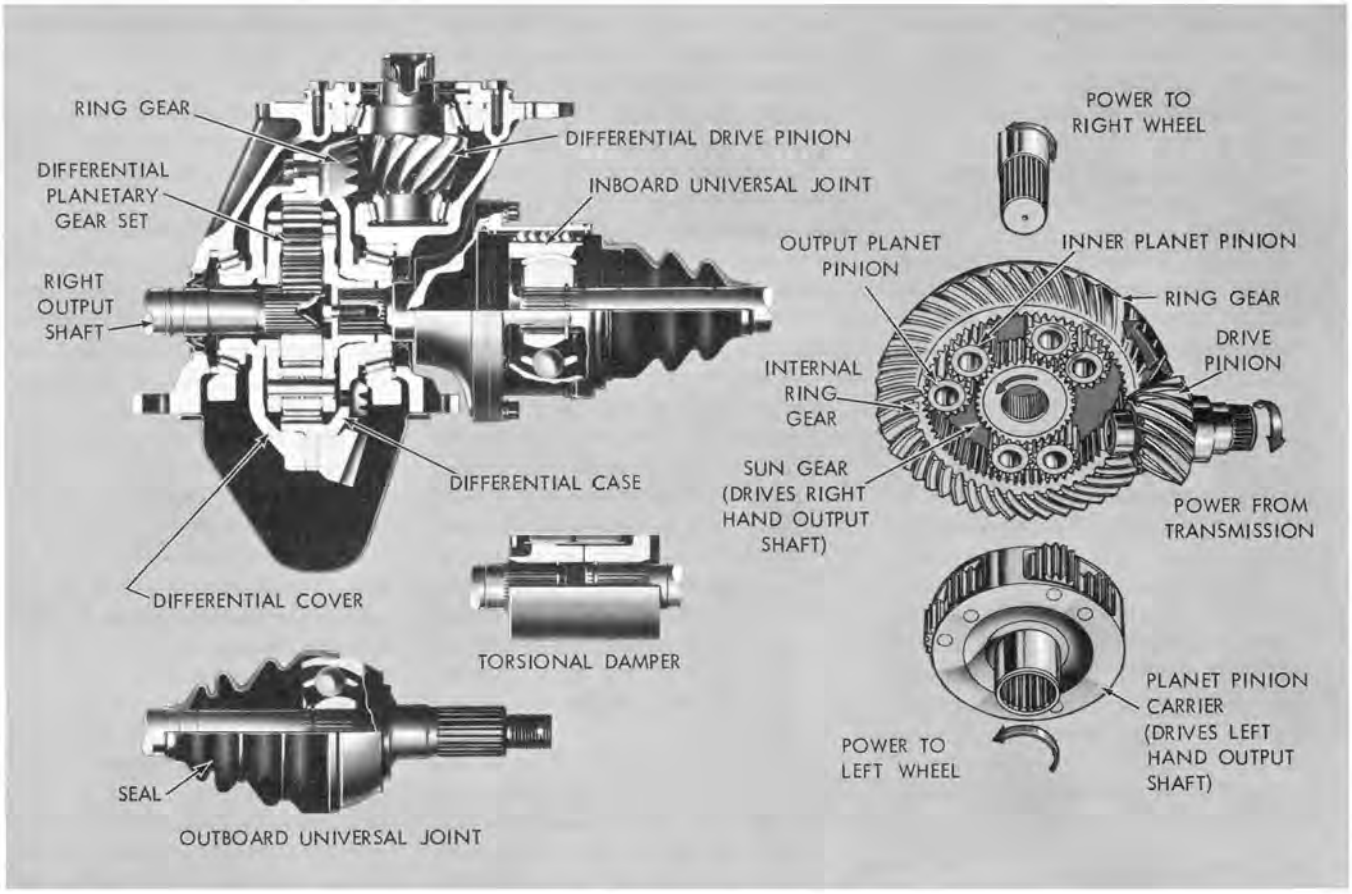

Fig. 6—FINAL DRIVE ASSEMBLY. A cross section of the Toronado's final drive assembly is shown at the left. The assembly, which is mounted and splined directly to the automatic transmission, consists of a drive pinion gear, a ring gear, and a planetary gear set. The gear set is comprised of a planet pinion carrier with three pairs of planet pinions, a sun gear, and an internal gear which perform the same function as the side gears and pinion gears in a conventional differential. Torque from the final drive is transmitted to a right and left output shaft which connect to drive axles. The right output shaft is splined to the sun gear while the left output shaft is splined to the planet pinion carrier. The drive axles are a flexible assembly and consist of an axle shaft and inboard and outboard constant velocity universal joints. Mounted to the right axle shaft is a torsional damper. The inboard joints have complete flexibility plus inward and outward movement. The outboard joints have complete flexibility only. The diagram at the right shows the power flow through the planetary differential. When the car drives through a turn, the outer planet pinion travels on the internal ring gear, rotating the inner planet pinion. This allows the sun gear to rotate to provide differential action. When the car is driven straight ahead, there is no relative motion between the planet pinions and the sun gear. Thus, both wheels turn at the same speed.

Root guiding proved to be a plus for chain noise control because chain pitch variation and mismatch with respect to the sprocket pitch cause variations in loads on the various links, thereby breaking up the noise impulses. In a flank guided design, these variations in pitch result merely in slight fluctuations in the point of contact on the sprocket tooth.

Insulation

The third and final area of quiet chain development was that of providing barriers to the noise with respect to the occupants of the vehicle. Much effort was

Fig. 7—COMPARISON OF VARIOUS FINAL DRIVE COMPONENT DESIGN CHANGES—EXPERIMENTAL AND PRODUCTION. During the development of the final drive for the Toronado, various components went through design changes as the system evolved through its experimental stages to the production version. Shown here are some of the components and the changes between the experimental design (top) and the production design version (bottom). The components are: differential carrier housing (a), differential cover (b), ring gear and drive pinion (c), differential case cover (d), differential gear case (e), and planet pinion gear (f).

invested to assure that adequate insulation was present in all noise paths into the vehicle. At the same time, an insulator was designed and released to production which completely enclosed the chain cover area. This insulator is molded rubber lined with glass fiber. The insulator fits over the sheet metal cover at the rear of the transmission, suppressing the air-born noise emitted by the chain and sprocket.

The combination of the low-rate sprocket supports, root guided sprocket, chain cover insulator, and carefully place l body insulation resulted in producing consistently quiet and durable chains throughout the range of production tolerances. The solving of the chain noise problem was a key development in the success of the front wheel drive Toronado.

New Differential Designed for Toronado

When the decision was made to proceed with the front-wheel drive concept in the Toronado, the final drive unit (Fig. 6) was located on the front of the transmission and on the lower left-hand side of the engine. This had a great deal of influence on the choice of ring gear and pinion design. A spiral bevel design was selected to eliminate the problems caused by pinion offset. The use of a hypoid design with the pinion either below or above the ring gear centerline would have run the right-hand axle shaft through the engine crank throw radius or reduced the ground clearance unacceptably. The spiral bevel design eliminated these problems and gave a 6.40-in. ground clearance with a five-passenger load.

The confinement imposed by the arrangement of the engine and transmission in the chassis also presented a special consideration in the design of the differential gears. A completely new planetary gear differential design, developed by the GM Engineering Staff, was selected because it incorporated a pancake design axle of minimum width.

Final Design Meets Criteria

Torque enters the final drive unit through a drive pinion gear where it first is multiplied by the 3.21 to 1 pinion-ring gear ratio then is transferred to the case. Full torque is transferred from the case through an internal ring gear, then into three outer differential pinion gears. The torque then splits, with one half going into the differential pinions, through the planet pinion carrier, and into the left-hand axle shaft. The other half is transferred through the pinion gears to the sun gear and into the right-hand axle shaft. During differentiation, if the left-hand wheel is slower, the planet pinion carrier is slower than the internal gear, forcing the pinions to over-speed the sun gear a corresponding amount.

The drive pinion and ring gear are spiral bevel designs with a 9.875-in. diameter ring gear. The drive pinion gear is straddle mounted and supported by two tapered roller bearings. The differential case consists of two halves bolted together through the outer flanges and threaded into the ring gear. Each case half is supported at the carrier housing by tapered roller bearings pressed onto the hub of each half.

The planet pinion carrier is a one-piece ArmaSteel casting with hubs on both sides that pilot in the two case halves. The left-hand axle stub shaft is splined to the carrier and retained by a bolt. The differential cavity is vented through a hole in this bolt and stub shaft into a pressure relief vent valve. Three pairs of planet pinion gears are supported within the carrier on pins and needle

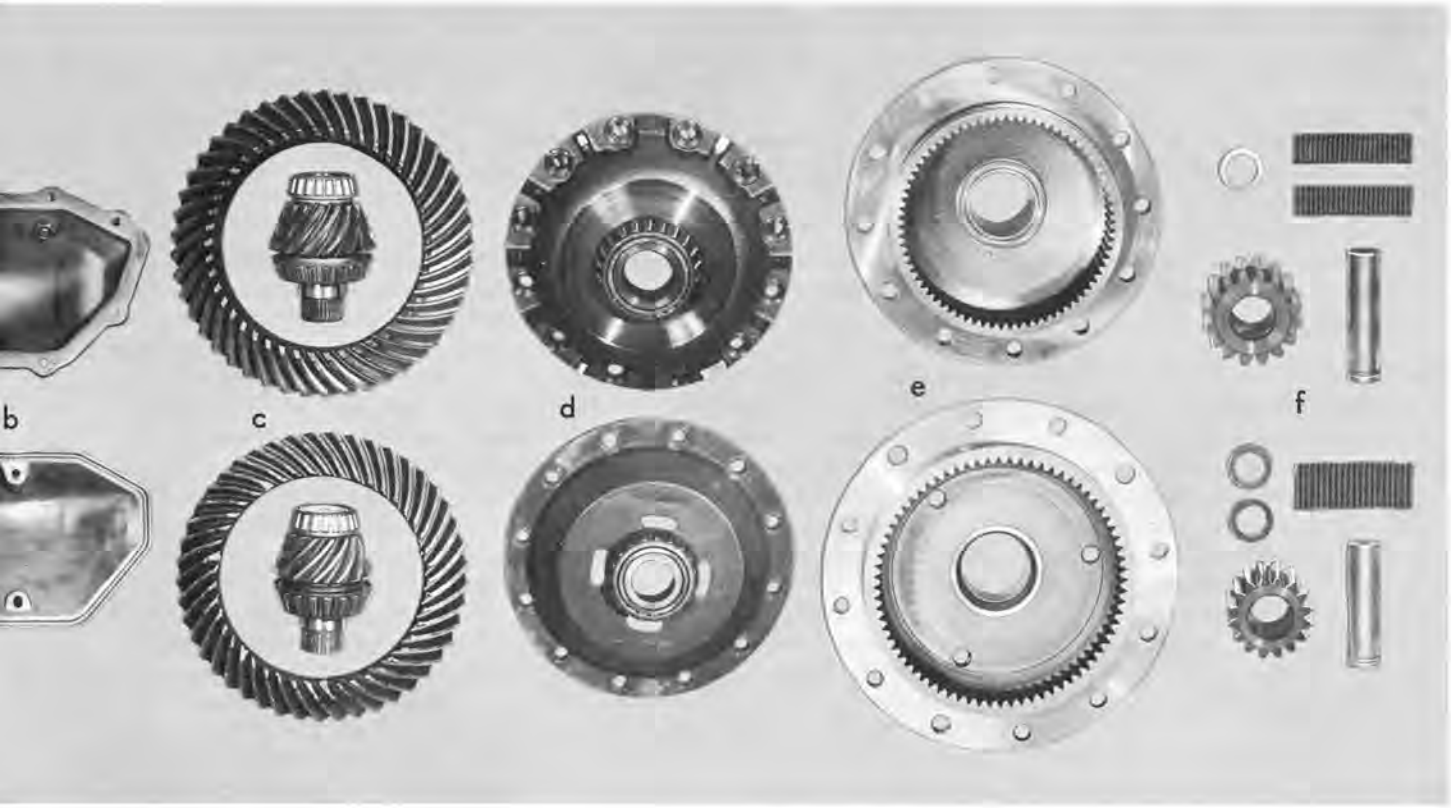

bearings. Each pinion has 16 teeth and rolls on a double row of 24 needles each. The sun gear (36 teeth) nests in the center of the planet pinion carrier and is splined to the right axle shaft. Hardened lubrited washers separate it from the carrier.

Changes Made During Final Drive Development

The final production drive design evolved through a developmental process as improvements were made in the early design concept. Some of the changes made during development can provide further insight into the design features.

Lubrication

The early final drive design used automatic transmission fluid as a lubricant. The transmission fluid was fed through a hole in the center of the drive pinion gear to the front pinion bearing, where it passed through the bearing and into the final drive sump. The ring gear dipped into the sump and the resulting splash lubricated bearings and gears. When the sump level reached a certain height, the fluid flowed back into the transmission sump.

Experience soon indicated that the transmission fluid supply was not a constant and steady source of lubricant under various speeds and temperatures. Score tests also indicated a border-line condition with the spiral bevel gear set. It then was decided to provide a separate fluid for the differential. This had the added advantage of preventing contamination of one unit in the event of a failure in the other. A high lubricity lubricant was selected for its good anti-score properties, adequate bearing protection during cold weather operation, and excellent lubricity qualities for the pinion gears.

Carrier Housing

The early cast malleable differential carrier housing was designed to close tolerances with thin sections to keep weight at a minimum. Deflection tests indicated that more structure was required to maintain good tooth contact under high torque conditions. Structural changes also were required to make room for a larger diameter ring gear and case (Fig. 7a).

Differential Cover

The original differential cover design used a square cut rubber ring for sealing and two bolts to retain the differential cover. To maintain cover flatness for good sealing qualities, the design was revised to use eight bolts for cover retention and a cellulose gasket for sealing (Fig. 7b). The fill plug also was moved to the cover for improved accessibility. Improved lubrication and cooling were obtained by deepening the cover to increase lubricant capacity.

Ring Gear and Drive Pinion

The early final drive design consisted of a spiral bevel 9.375 in. in diameter, a 45-tooth ring gear, and a 14-tooth pinion gear with a 19° pressure angle. Both pieces were forged from 4118 steel.

As the need for increased torque capacity in the gear set became apparent, the ring gear diameter was increased to 9.875 in., a larger tooth profile was used to reduce the unit loading, tooth pressure angle was changed, and the steel specification was changed to 4617 on both ring gear and pinion (Fig. 7c).

Differential Case Cover

Deflection tests on early final drive units indicated that significant gains could be made to hold good tooth contact under torque, if the case cover could be strengthened to reduce collapse. Four cast lubrication holes adjacent to the hub were eliminated. The flat sections were thickened and modified into a cone type cross section for increased strength. Ribs were extended out between ring gear bolts. The side bearing hub diameter was increased and thickened, which required a new side bearing (Fig. 7d).

Differential Gear Case

The differential gear case was originally an ArmaSteel casting with the differential internal gear teeth cut on the inside diameter. Hertz stress on these teeth was quite high and early durability data indicated life would not be satisfactory. Deflection tests also indicated some collapse of the case from the added thrust load from the left-hand side bearing.

A flame-hardening operation of the ArmaSteel gear teeth was tried, but distortion of the teeth during the heat treat operation occurred. It also appeared that sufficient hardness could not be obtained to produce the required durability.

With this background information, a complete redesign was made that eliminated all durability problems (Fig. 7e). The case material was changed to forged 4118 heat treated steel and the flat area and hub sections were thickened. Pitch diameter was increased from 5.1429 to 6.000 in. Diametral pitch changed from 14 to 12 in.

Pinion Gears

The original design consisted of 16-tooth pinion gears, 0.5064-in. diameter pinion pins, and a single row of 20 needle bearings. Tooth bending loads on the pinion gear teeth and Hertz compressive loads on the needles and pins became excessive with increased torque requirements. To reduce these loads to a satisfactory level and obtain good durability, several design changes were made (Fig. 7f). Pinion gear pitch diameter was increased, and pinion gear diametral pitch was changed from 14 to 12 in. Pinion gear material was changed from 4140 steel to 4617. Pinion pin shaft diameter was increased and its material was changed from 1024 steel to 1085. Needle bearing diameter was increased, a second row was added to each gear, and the number of needles in each row was increased from 20 to 24.

Breather Vent

Considerable difficulty was encountered in obtaining a breather vent that did not leak under certain conditions. Various locations and different baffle designs were attempted. The solution finally was obtained by drilling a hole through the left-hand stub shaft and retaining bolt with a pressure relief valve threaded into the stub shaft.

Summary

The design and development of a quiet, durable chain and sprocket cross-drive assembly for the Toronado transmission was a key factor in the production of the front wheel drive vehicle. Similarly, the final drive unit required special design consideration because of its orientation and space limitations in the car. The final design—a spiral bevel unit—has a planetary gear differential which allows the use of a pancake axle design of minimum width.

The development of the chain and final drive components has provided the Toronado with a quiet and smooth power train, making it the first successful front wheel drive vehicle with a high-performance engine and fully-automatic transmission.

Some Aspects of Body and Sheet Metal Design for the 1966 Toronado

By GEORGE T. JONES,
ROBERT J. SCHULTZ,
and ROBERT D. TOWER
Oldsmobile Division

The Toronado provided engineers at Oldsmobile and Fisher Body Divisions and GM Styling with new latitudes in body and sheet metal design. The flat floor permitted increased passenger compartment space and the increased room in the rear of the vehicle allowed unconventional trunk design, including a lower trunk floor. A completely new ventilation system was designed for the Toronado. Several other changes in such components as radiator fan shroud, retractable headlamps, and hood latch design had to be made either to accommodate or to take advantage of the new vehicle configuration.

Several advantages provided by front wheel drive car

THERE are many aspects of the Toronado body (Fig. 1) and sheet metal design which by themselves would cause the car to be rated as outstanding. Interior spaciousness, exterior design, body structure, ventilation system, instrument panel design, and the accessories reflect the approach evident in the overall concept of the car.

Passenger Compartment Features Flat Floor

One of the major reasons for selecting front wheel drive for the Toronado was the improved passenger compartment offered by the design. A flat floor (Fig. 2) was made possible by eliminating the drive line to the rear axle. In the Toronado, this permits an unobstructed width of 63 in. from door sill plate to door sill plate. The interior dimensions assure adequate leg, head, and shoulder room despite the low silhouette of the car.

Good rear seat entrance and exit conditions were achieved by positioning a door of increased width rearward with respect to the seats (Fig. 3). This moved the lock pillar rearward from the front seat, providing increased entrance area to the rear seat between the pillar and front seat. This arrangement, in combination with the low floor, makes the rear coupe seat as accessible as many on four door sedans.

In addition to increased space in the passenger compartment, the Toronado includes several other features—newly designed front and rear seats, instrument panel (Fig. 4), and door handles which may be operated from the rear seat.

Insulation and Body Mounts Reduce Noise

A quiet car contributes greatly to driver satisfaction and comfort. For this reason, special attention was given to the acoustical treatment of the Toronado. In addition to the visible molded glass fiber hood insulation, various sound deadening materials are concealed throughout the body (Fig. 5).

While the Toronado's unique body structure provides the space saving advantages of frame integral construction at the rear, a separate sub frame with

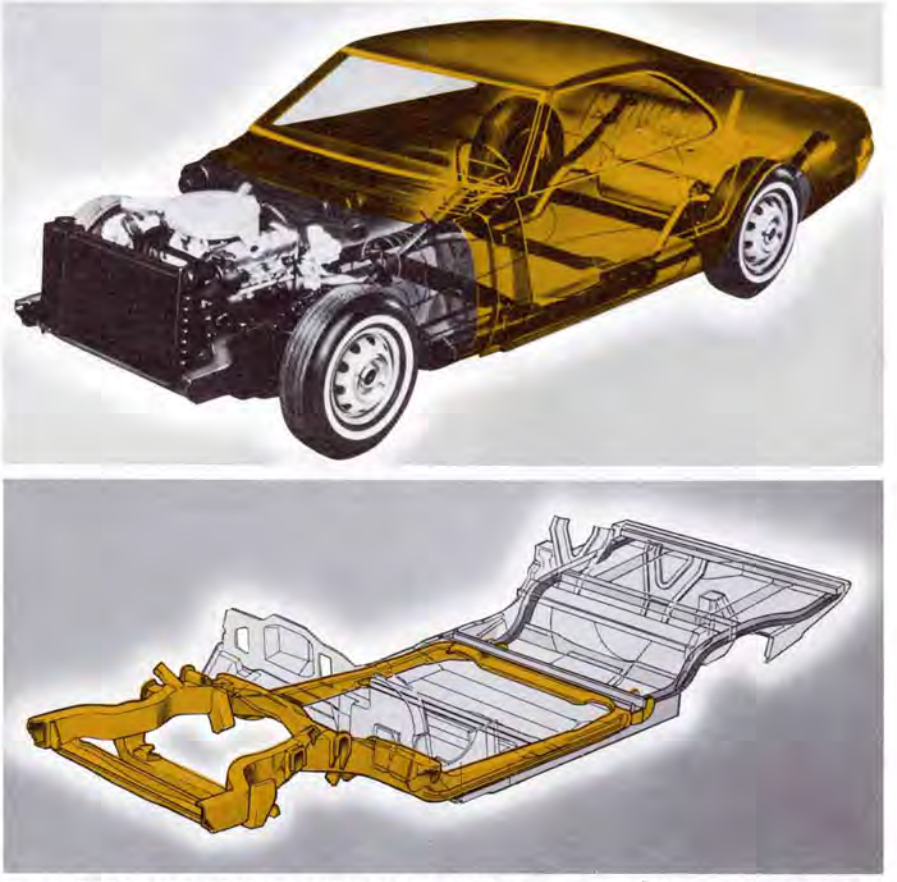

Fig. 1—TORONADO BODY-FRAME RELATIONSHIP. The Toronado body (top), indicated by the shaded area, is assembled to the chassis, which includes the sub frame, power train, and suspension systems. To complete the vehicle the sheet metal, which includes the front fenders, hood, grille, and related components, is added. The drawing at the bottom indicates the relationship of the sub frame (shaded) to the underbody.

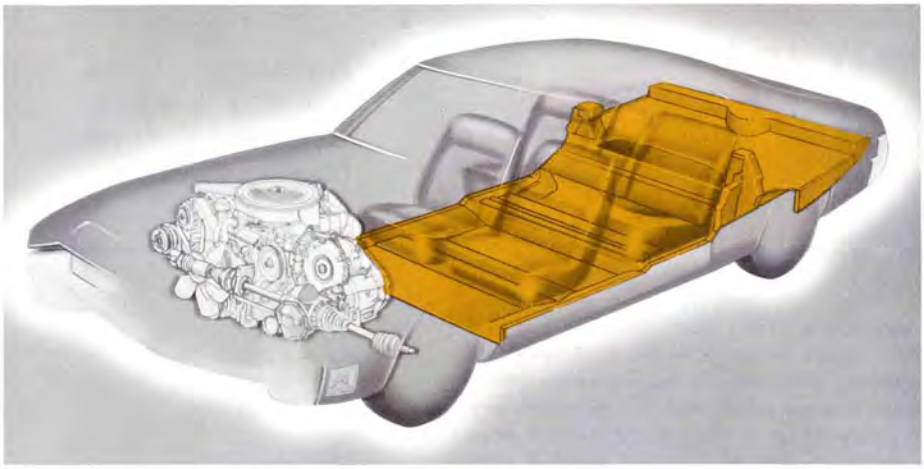

Fig. 2—FLOOR AND TRUNK. The Toronado's flat floor and trunk are indicated by the shaded portion of this drawing, which shows the underbody.

Fig. 3—WIDE DOOR DESIGN, STRATO SEATS. To provide easier access to the rear seat, the Toronado features a door that is 3.5 in. wider than comparable coupe doors. This provides a 37-in. wide opening to the passenger compartment when fully opened. Six passengers may sit comfortably in the newly designed front and rear seats. In the standard Toronado model, a conventional bench seat is used, while in the deluxe model a specially designed strato bench seat (shown here) is standard equipment. Available as optional equipment on the strato seat is an infinitely adjustable reclining right side front passenger seat, which may be tilted rearward to a maximum of 30° from the normal position. Adjustable headrests are available for the driver and passenger on all front seats.

Fig. 4—INSTRUMENT PANEL DESIGN. All controls and instruments are mounted in one die casting located directly in front of the driver. Instruments include needle type ammeter and temperature gages. The speedometer is a drum dial type. The padded instrument panel extends the full width of the car.

Fig. 5—ACOUSTICAL INSULATION. In addition to a molded glass fiber hood insulator, a variety of sound deadening materials is used throughout the Toronado. A perforated vinyl headliner deadens the roof panel as well as absorbing noise originating within the car. A heavy, molded one-piece dash insulator effectively isolates engine compartment noise. Varying thicknesses of jute and heavy mastic under the carpet mask out road noises and deaden vibrations. Additional insulation is provided on the air inlet plenum chamber, under the rear package shelf, in the rear quarter panels, under the seats, and in the shroud sides. Deadeners on the door panels, rear wheelhouse panels, rear seat pan, roof, and trunk serve to keep those large panels from vibrating as a result of road excitations.

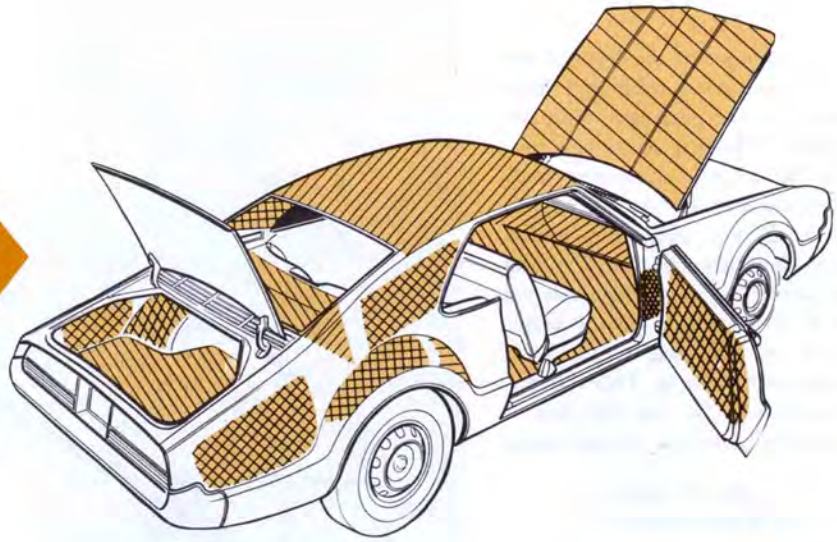

Fig. 6—BODY-FRAME MOUNTS. Rubber body mounts on the sub frame isolate the power train and front suspension from the passenger compartment.

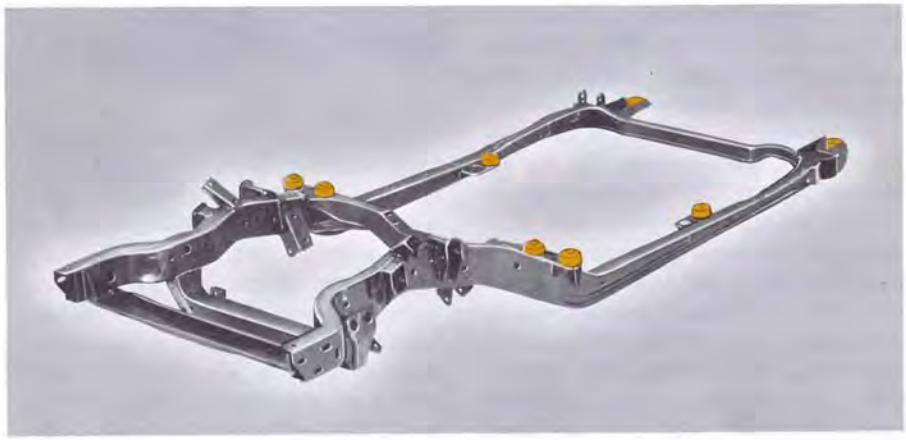

Fig. 7—TORONADO VENTILATION SYSTEM. The flow through ventilation system used in the Toronado eliminates the need for side vent windows. The ventilation air first enters the cowl vent grille. It then flows into the body through ball type outlets at each end of the instrument panel and a center outlet high in the instrument panel for optimum efficiency. The center and side outlets can be controlled individually for direction and volume of air. A blower provides forced air through these outlets at lower car speeds when ram air flow would be inadequate. In addition, air at a lower level is available if desired, through one or both shroud side outlets. This selection is made by push buttons in the ventilation control. These buttons control all of the air valves for both the upper and lower ventilation systems by means of vacuum operated diaphragms.

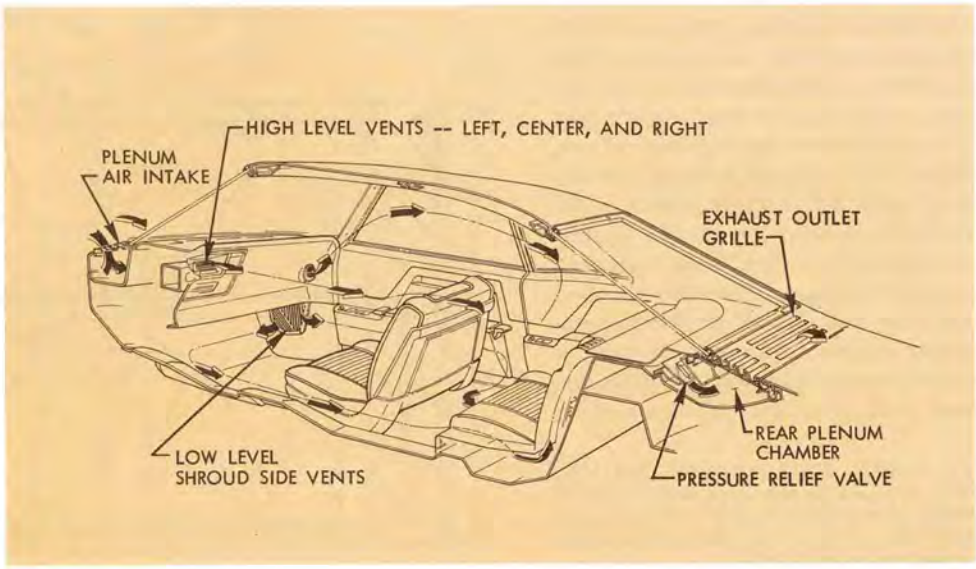

Fig. 8—HOOD LATCH RELEASE MECHANISM.

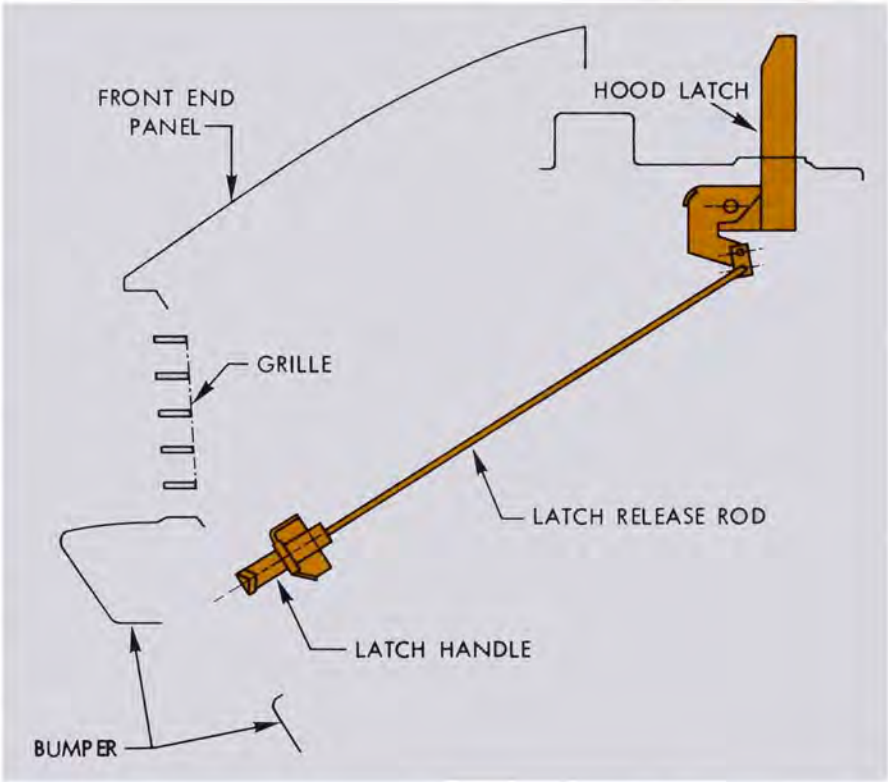

rubber body mounts at the front of the car isolates the power train and front suspension from the passenger compartment (Fig. 6). The original design concept called for all rear suspension loads to be taken directly by the body, with both ends of the single-leaf spring attached to the body side rail. The final design, however, has the spring front eye attached to the frame to give a better distribution of rear suspension loads through the body mounts. This also further reduces road noise and vibration or harshness in the passenger compartment.

Air System Eliminates Side Vent Windows

Of particular interest is the elimination of the vent windows, which no longer are required to obtain controlled ventilation. The Toronado uses a flow-through ventilation system featuring forced air and anti-backflow provisions (Fig. 7). Elimination of vent windows provides better visibility and improved appearance.

A considerable amount of development effort was expended on the air exhaust system. The objective was to provide automatic operation with ideal flow over rear seat passengers and no noise feedback or air backflow from the rear outlet. The keys to this accomplishment were a pressure-operated one-way valve ahead of the outlet grille and the addition of air outlets in the instrument panel to provide high and low level ventilation.

A slightly positive pressure is maintained in the body by the air valve in the rear plenum chamber, located beneath the grille under the rear window of the car. Pressure buildup causes the valve to open, allowing air to flow over rear seat passengers and out beneath the rear seat. From there it passes through the seat back panel and out the plenum grille, providing uniform, low velocity air flow throughout the entire car for maximum passenger comfort. This valve also prevents the back flow of air into the passenger compartment when the body is under negative pressure. This condition may occur, for example, when running with the heat or vent system off and the front windows partially opened. The plenum chamber also serves as a water separator, diverting incoming water into drain tubes on either side of the body which carry it out beneath the car.

The area selected for the air exhaust was the result of extensive studies. It had to be in an area where body aerodynamics could create a negative pressure when the car is in motion, where noise could be isolated from the passengers, and where dirt would not accumulate to interfere with the function of the system. The area under the rear window was chosen after extensive wind tunnel testing on model cars and actual road tests on earlier model cars with reworked roofs, decks, backlights, and quarters. The design finally was verified on the actual prototype test cars.

The grille opening area and the angle

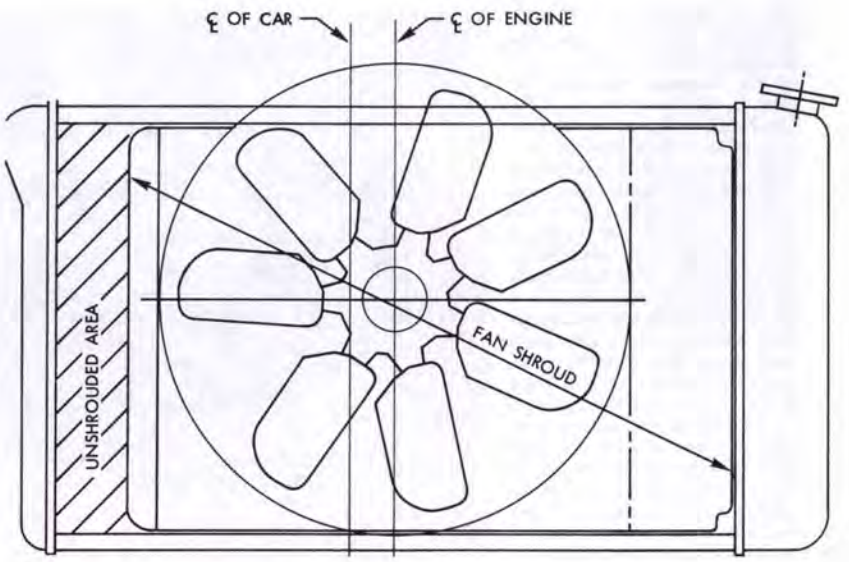

Fig. 9—FAN SHROUD CONFIGURATION. This rear view of the radiator shows the fan shroud design, which retains a three-in. wide unshrouded area along one side. This design permits proper cooling rates at high speeds.

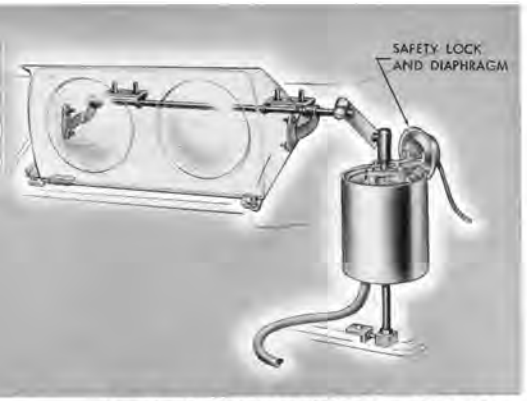

Fig. 10—HEADLAMP VACUUM ACTUATOR. Each headlamp assembly is raised and lowered through a hinge, shaft, and lever by an individual vacuum actuator. The safety lock and diaphragm are designed to prevent the headlamps from retracting due to vacuum failure while the lights are on. If the lamps are in the down position and a vacuum failure occurs, they can be raised manually by lifting them to their up position. The safety lock engages automatically to hold the lamps in the up position.

of the grille louvers were developed to give adequate air flow to provide comfortable ventilation, yet not enough to cause loss of efficiency in the heating or air conditioning system performance. The design is, in effect, a carefully controlled body air leakage. During development of the system, turbulent air flow over the outboard ends of the grille produced an objectionable noise. This was eliminated by baffling installed in the grille to block off the outer ends which were causing the problem.

The resultant system allows passengers to select the degree of ventilation and direction of air flow they desire without the noise and drafts encountered when the usual vent window or side window is opened.

Engineering, Styling Influenced Sheet Metal Design

The sheet metal for the Toronado was designed to suit specific engineering and styling requirements. The space requirements of the front wheel drive mechanism dictated a longer than normal front end, which lent itself well to graceful styling. This long, low style governed the design of the front end structure, and made a retractable headlamp system desirable so that the smooth flowing lines of the sheet metal could be maintained. The front wheel drive also created some unusual conditions which had to be considered in the design of the radiator, fender, and filler plate areas.

Wheel Opening

Styling was influenced in the area of the fender wheel opening by filler plate clearances. These were established by actual measurements taken on a pretest car during severe driving maneuvers. The resultant wheel opening line then was given to GM Styling where the line was refined but remained basically unchanged. Previous design standards were not applicable because design clearance for chains on the front wheels had never been considered, nor had designs ever been considered for chains on a driving wheel that was steerable.

Mounting

Two methods of sheet metal mounting, center mount and side mount, were investigated thoroughly during the development program. A special frame bracket to mount the sheet metal at only one point on the center line of the car was designed and tested. This method opposed that of mounting the sheet metal lower tie bar at two points—one on top of each of the frame side rails.

The center mounted sheet metal design softened the wheel impact loads which were transmitted into the body through the sheet metal, but this design permitted more sheet metal shake on washboard type roads than did the side mounted sheet metal. Therefore, the side mounting provided the desired structural characteristics for this particular automobile.

Extensive testing on the laboratory shake fixture and the chassis dynamometer indicated the need for reinforcing in both the frame and sheet metal assemblies. With the indicated design adjustments completed, the best compromise between softness and shake was developed. Additional damping of wheel impact was obtained by attaching the filler plates to the frame side rails approximately midway between the sheet metal mounting points on the frame and the fender mounting points at the front of the dash panel. The filler plate, when mounted in this manner, flexes slightly and acts as a shock absorber in softening the wheel impact loads that are transferred to the front end sheet metal.

Hood Latch

The hood latch release design was governed by the combination of the front end panel and the radiator grille design. Accessibility to the latch release required that the latch handle be located in the bumper area. A single release lever of the required length had a greater arc of travel than could be accommodated. A combination of a rod and a latch lever (Fig. 8) was developed to meet the design requirements of space, operating effort, and accessibility.

When released, the latch assembly did

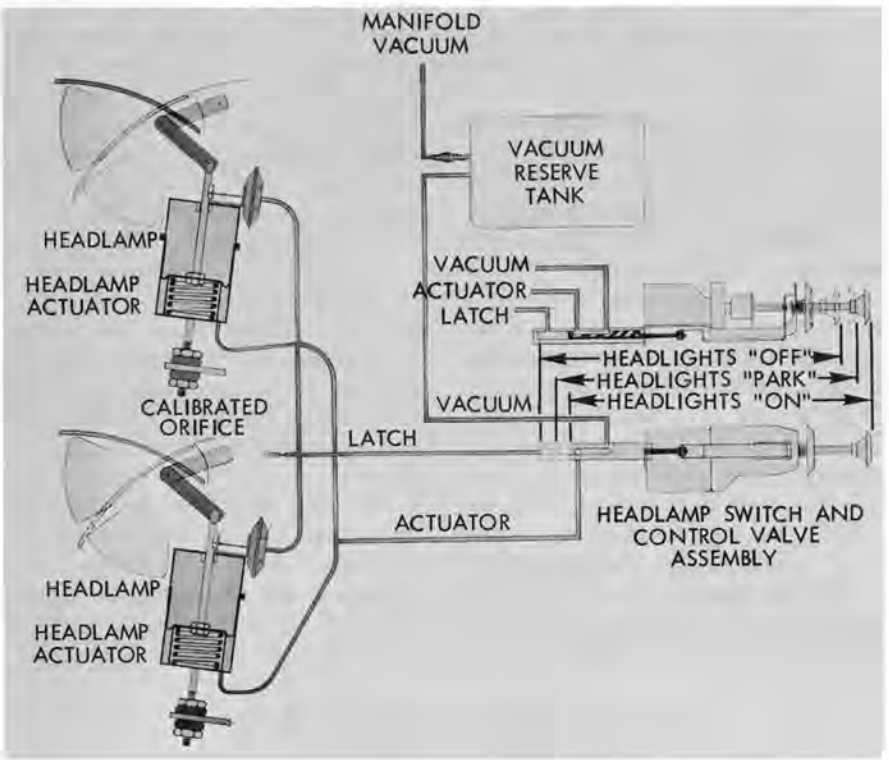

Fig. 11—HEADLAMP VACUUM CONTROL SYSTEM. The switch for the headlamp vacuum system is mounted on the electrical switch that controls lamp illumination. The headlamp assemblies are raised automatically when the lamps are turned on, and lower when the light switch is off or when only parking lamps are on.

not raise the hood sufficiently to disengage itself from the safety hook. Since it was impossible to hold the latch handle in the unlatched position with one hand and raise the hood above the safety hook with the other hand, a pop-up spring was required.

A compression spring design which provided an adequate amount of pop-up required a retaining cup which was too deep for the space between the upper tie bar and the hood inner panel. In addition, compression springs of sufficient strength to perform properly tended to keep the hood outer corners up away from the hood stop bumpers and the hood could not be stabilized satisfactorily. A torsion spring was designed that met all of the design requirements and was much more compact than the compression type spring.

Radiator Design

The Toronado front wheel drive created a new engine cooling challenge. When the entire drive train is placed in the same space that is normally allotted to the engine alone, engine cooling becomes a special consideration. The extra machinery in the engine compartment created a pressure build-up behind the radiator core. To overcome this, it was necessary to create a high pressure area in front of the core. This was done by trapping all of the ram air entering through the grille and bumper with baffling, which effectively minimizes the amount of air by-passing the core.

For most efficient use of the radiator frontal area, a low, wide core was needed to match the style of the car's front end. A crossflow core was selected which not only had these characteristics, but also provided better fan sweep coverage than conventional cores and permitted good air flow from the engine compartment. By using the advantages of crossflow radiator design and by proper sealing to assure optimum air flow patterns, proper cooling was obtained.

Because of the increased cooling requirements of cars with air conditioning and the Air Injection Reactor system, a fan shroud is required on these models. The Toronado fan shroud is unique in that it does not shroud the entire width of the core. A full width shroud was found to obstruct the air passing through the radiator core at high car speeds penalizing high-speed cooling. To overcome this condition, a three-in. width of the core was left unshrouded along one side (Fig. 9).

Headlamps

The Toronado was styled with retractable headlamps. The headlamp geometry employs a total travel of 56° with the weight cantilevered approximately six in. off the axis of rotation. The design goals were that the system should raise the headlamps quickly and automatically and have sufficient power to operate during icing conditions. An electrical system was considered, but it required gear ratios that would not produce acceptable operating speeds. A vacuum-actuated system was designed that produced the required torque and speed of operation. Each of this system's two vacuum actuators is capable of applying approximately 200-lb pull to the hinge lever.

The retractable headlamp system operation is completely automatic. When the headlamp switch is pulled to the *on* position, the lamps illuminate and raise automatically to their operating position in approximately six seconds. To lower the headlamps, the headlamp switch is pushed to the *park* or *off* positions, and the headlamps are extinguished and retracted automatically.

The retractable headlamp system is operated by engine manifold vacuum. A vacuum reserve tank in the system permits approximately three full cycles of operation with the engine off. Each dual headlamp assembly is raised and lowered through a hinge, shaft, and lever by an individual vacuum actuator (Fig. 10). The headlamp assembly travel terminates against an adjustable stop in the up position.

Just as the headlamps reach the up position, a mechanical safety lock snaps into a notch in the actuator rod. This safety lock helps preclude retraction of the headlamp assemblies due to a vacuum failure while the lights are on.

In the event of a vacuum failure with lamps in the down position, the headlamp assemblies can be raised manually by lifting them into their up position and engaging the safety lock until vacuum operation is restored. The headlamp housings retain the conventional lamp assemblies and permit accurate headlamp adjustment in accordance with S.A.E. standards and state regulations.

The headlamp vacuum switch is mounted on the electrical switch and operates with a common push-pull rod (Fig. 11). When the headlamp switch is on, the vacuum in the reserve tank is ported through the switch to the actuators which raise the lamps. The safety lock diaphragms are open to atmospheric pressure which permits the locking slides to engage the notch in each actuator rod as the lamps are raised.

When the headlamp switch is pushed to either the *parking lamp* or *off* position, the actuator and safety lock diaphragm circuits are connected. The vacuum in the actuators causes the safety lock diaphragms to retract their locking slides until atmospheric pressure is restored again in the system. As the locking slides are disengaged from the actuator rods, the springs in the actuators lower the lamps into the closed position.

A prototype working assembly of the vacuum headlamp system first was installed in a 1965 Oldsmobile for evaluation. The car was driven across the country and tested at altitudes up to 12,000 ft with temperatures down to −10 F in weather conditions including rain, sleet, and snow. The vacuum system proved out well under all conditions, even at altitudes where the vacuum supply was cut by more than half. Testing was continued in the laboratory. After 100,000 cycles were achieved without failure, at temperatures ranging from −20 to +250 F, the system was approved for production.

Summary

The development of any new model car requires the re-evaluation and alteration of many body and sheet metal components. The development of the Toronado, with its significant departure from the conventional vehicle configuration, presented many new challenges to engineers—both to meet new design demands and to take maximum advantage of new design possibilities.

The 1966 Toronado body was designed to use the increased interior space afforded by the front wheel drive concept, was provided with an entirely new ventilation system, and features several other developments, such as wider doors and door handles accessible from the rear seat.

The sheet metal for the Toronado features new styling concepts adapted to the front wheel drive vehicle, and includes several newly designed components such as the headlamp system and radiator design.

A Summary of the Toronado Engineering Test Program

By THEODORE N. LOUCKES
and CHARLES L. PORTER
Oldsmobile Division

Toronado subjected to extensive lab, proving ground road tests

When development of the Toronado started, a comprehensive test plan to prove its function, safety, and durability was formulated. Testing had to be adjusted to the new requirements of a front wheel drive, particularly in such areas as durability, noise, and handling.

In the Oldsmobile laboratories, at the three GM Proving Ground facilities, and on highways all over the country, a comprehensive testing program became the final phase in the Toronado development. Laboratory testing was in progress as early as 1958 when a chain durability testing fixture was designed that proved vital to the final development of a quiet, smooth running front wheel drive car.

The use of high-speed motion picture photography to gain insight to dynamic problems also proved invaluable in the Toronado development. As an example, the behavior of the transmission drive chain and sprockets was studied extensively using this technique. The information gained on chain link behavior and tooth contact contributed greatly to the development of satisfactory chain quietness and durability.

Drive Line Tests Important in Lab Program

The most important phase of Oldsmobile's laboratory testing program centered around the front wheel drive components themselves—engine, transmission, differential, and drive shafts. To test this complete assembly, a procedure was developed to evaluate quickly the practicality and durability of a given design before durability test cars were built.

Testing all drive train components simultaneously was an ambitious project in laboratory testing, but the compactness of a front wheel drive lent itself to this approach. A complete assembly was connected through the front drive shafts to two absorbing dynamometers (Fig. 1). The engine provided the driving power.

The key to this test was Oldsmobile's extensive experience in magnetic tape programming which had proved itself a valuable tool in engine and transmission development. To simulate actual driving durability schedules, magnetic tape on a multi-channel programmer controlled engine rpm, throttle opening, transmission driving range, and individual front wheel speeds.

The control tape was made while a vehicle drove over a prescribed durability course at the GM Proving Ground near Milford, Michigan. When installed on the programmer in the laboratory, the tape repeated the schedule exactly for over 900 miles per day. This had the distinct advantage of rapid evaluation because it eliminated down time caused by vehicle maintenance requirements, permitted exact reproduction without weather and human variables, and allowed visual evaluation of the components while they were operating. This was especially important in the development of the transmission drive chain and sprockets.

Suspension Tests Required New Fixture

Testing an entire suspension system in the laboratory has been done during the development of all new Oldsmobile models for several years. Because of the newness of the Toronado front suspension, however, a completely new fixture design was necessary.

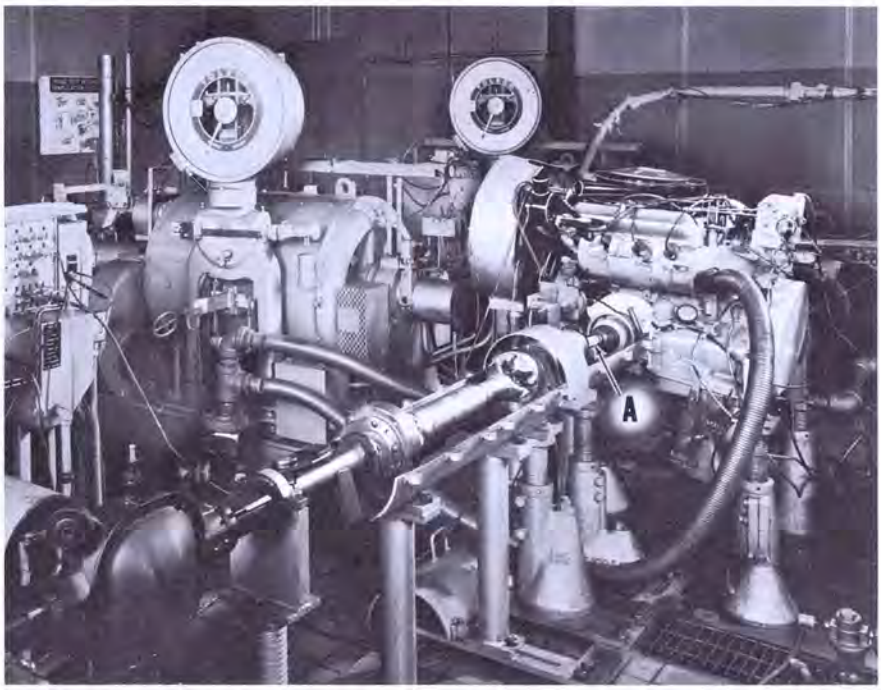

Fig. 1—FRONT WHEEL DRIVE DYNAMOMETER TEST. The drive train components—engine, transmission, differential, and drive shafts—were tested simultaneously by connecting the entire assembly through the drive shafts *A* to two absorbing dynamometers.

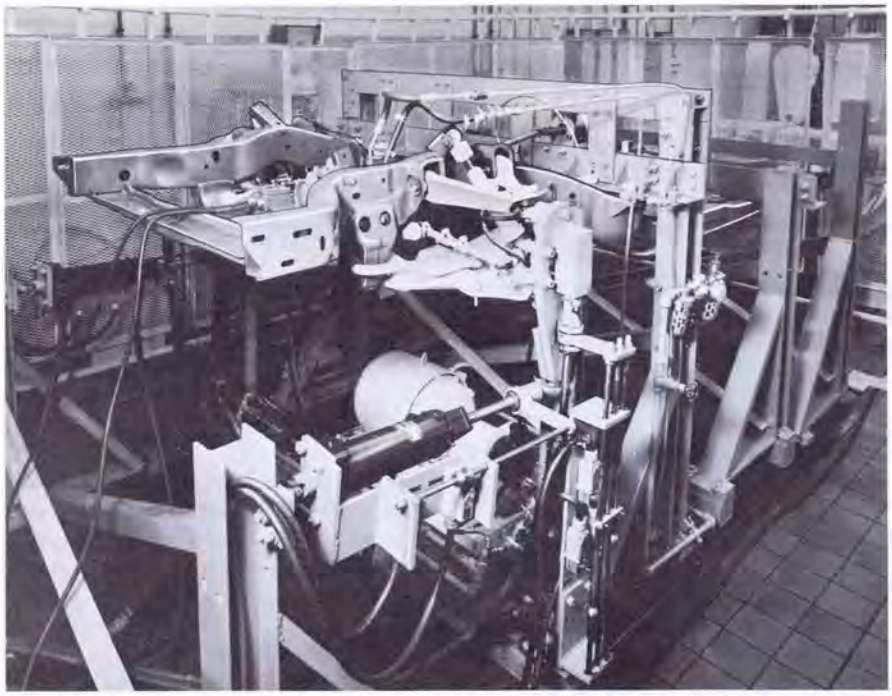

Fig. 2—FRONT SUSPENSION TEST FIXTURE. Hydraulic cylinders beneath the front hubs were used to simulate compression and rebound wheel travel. Cylinders ahead of the hubs simulated brake loading and were applied every tenth compression and rebound cycle. A reversible air motor simulated a driver by turning the steering gear from full right to full left. The power steering pump was driven by an electric motor and a heat exchanger was used to maintain control of power steering pump oil to simulate realistic road temperatures. The front shock absorbers were water cooled to maintain the proper shock oil temperature.

The criteria for designing a laboratory front suspension test fixture were:

- Test the entire suspension system including control arms, torsion bars, bushings, steering system, stabilizer bar, ball joints, body mounts, and frame
- Cycle the suspension system through maximum travel in compression, rebound, and turning, in addition to applying brake loads.

Many design changes were made to obtain one-million maximum stroke cycles for all parts without failure. Road testing has confirmed that parts which pass this test also pass GM Proving Ground durability tests.

The front suspension testing fixture (Fig. 2) was designed so that its control system could be cycled manually or automatically. The manual operation was such that all modes were independent of each other, thus permitting detailed observation of each. This fixture enabled rapid development in the laboratory of the basic suspension structure before durability test cars were built to run on the road.

Additional Tests Performed in Laboratory

While drive line and front suspension endurance tests were of major importance, several other tests were designed specifically to meet the requirements of the Toronado.

Single-Leaf Spring

A thorough testing program was necessary for the stamped rear axle and single-leaf springs used in the rear suspension. A rear leaf spring cycler (Fig. 3) was designed to cycle one or two springs simultaneously at 40 cpm. On the initial set-up the spring stroke was adjusted to within 0.005 in. of maximum compression and rebound. Starting the fixture activated a

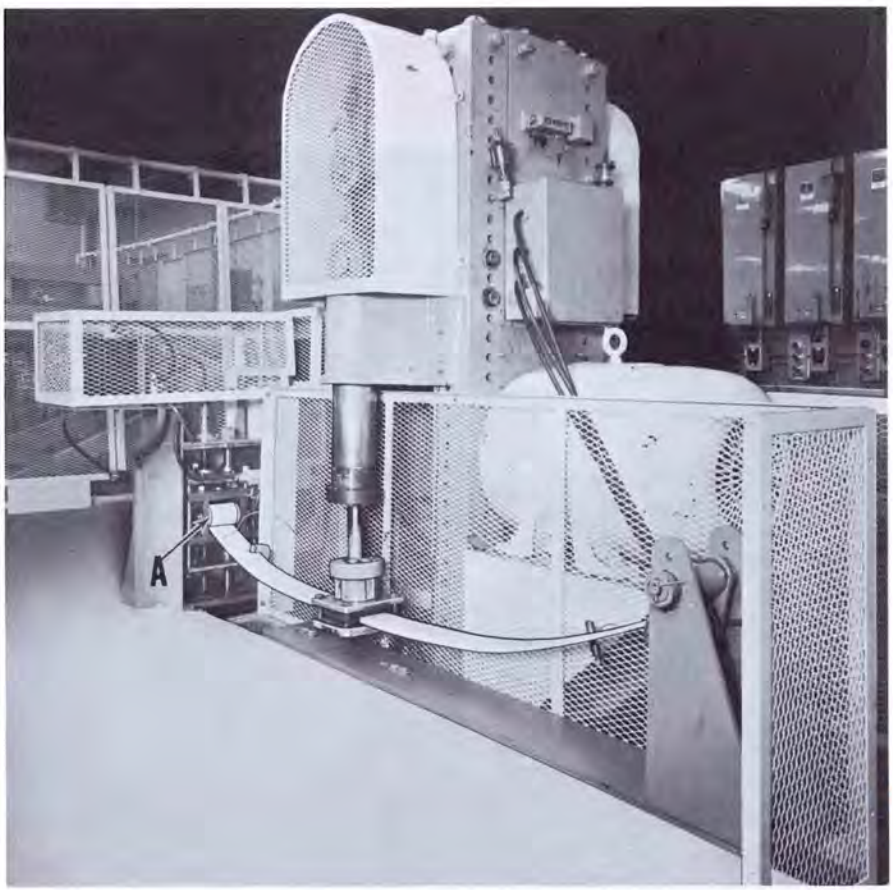

Fig. 3—SINGLE-LEAF SPRING CYCLER. The single-leaf spring was cycled at a rate of 40 cpm from full compression to full rebound. A constant load device adjusted the vertical position of the front spring eye *A* to compensate for spring sag. The protective screen was removed from the test facility to provide clarity for this photograph.

constant load device, which in turn activated a limit switch if the load began to decrease. The limit switch engaged a ratchet which adjusted the vertical position of the spring front eye, until the proper load again was achieved. This assured maximum loading throughout the test. Spring load and rate checks were made before and after testing to measure sag and rate change.

Rear Suspension

A rear suspension endurance cycler (Fig. 4) was developed which loaded the rear suspension as an assembly. Maximum compression and rebound cycling were simulated with vertical air cylinders. Braking loads were applied every tenth compression and rebound cycle by a horizontally mounted air cylinder. The fixture controls permitted in-phase or out-of-phase cycling of the vertical cylinders.

Torsion Bars

A torsion bar endurance cycler was designed to cycle two, four, or six torsion bars simultaneously between full compression and rebound. The fixture (Fig. 5) held the bars in the same attitude as in the vehicle. Each torsion bar station had a constant load electro-mechanical system that wound up the bar if load loss occurred during cycling. If a bar broke while cycling, the machine automatically shut off, disengaged the failed torsion bar station, and restarted the remaining stations. To predict spring sag, an electronic recorder kept a permanent record of the windup on each torsion bar.

Universal Joints

Road testing produced a fretting problem in the inboard constant velocity joints. This fretting problem was duplicated in the laboratory by rotating the universal joint in the fixture that held the shaft in car position. This test showed that the straight ahead joint angle in the plan view had to be at least 3-1/2° to produce sufficient joint movement to prevent fretting.

Retractable Headlamps

To aid the retractable headlamp testing program, a laboratory fixture was developed to cycle two headlamp assemblies simultaneously. Air cylinders cycled the headlamp switch through the *on* and *off* positions, while vacuum was continuously supplied to the reserve tank by a vacuum pump. The test was cycled in extreme temperature environments from — 40 F to 250 F. The headlamp doors also were tested with a thick crust of ice to assure adequate opening strength.

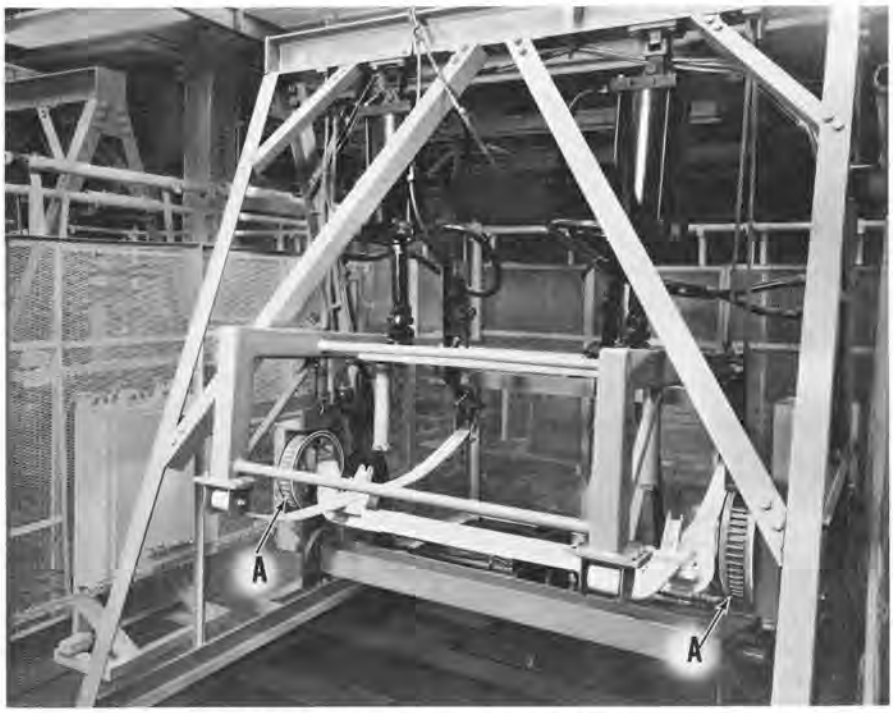

Fig. 4—REAR SUSPENSION CYCLER. In this test, vertical air cylinders operated the rear suspension through its complete range of travel. A horizontal air cylinder simulated brake loading by applying force to a horizontal beam attached to the bottom of the brake drums *A*. The protective screen enclosing the test facility was removed when this picture was taken.

Brake Drums

A brake drum endurance test was developed to duplicate repetitive stops from 100 mph. The brake drum was

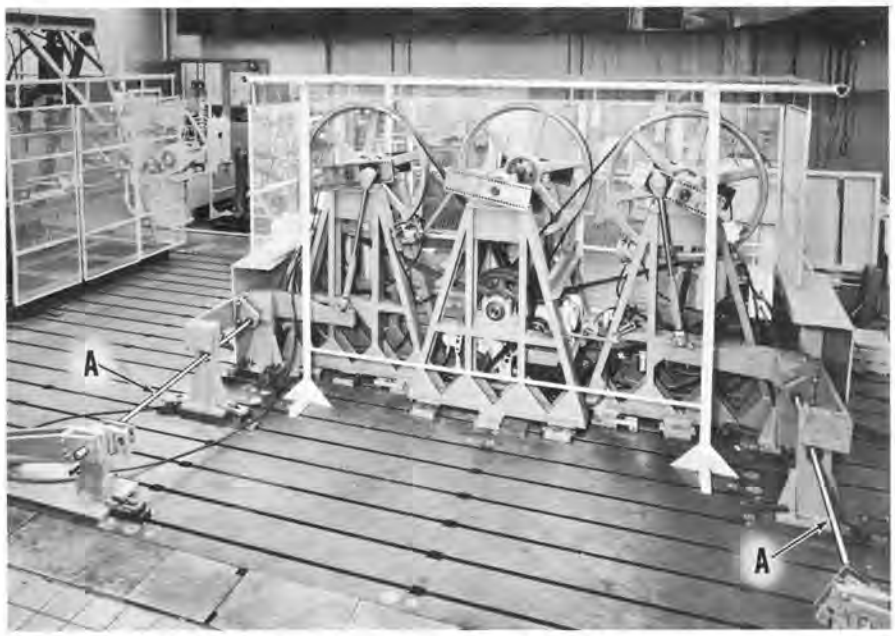

Fig. 5—TORSION BAR CYCLER. The torsion bar test device could cycle two, four, or six torsion bars simultaneously. Two torsion bars *A* are shown installed here for a test. The electro-mechanical constant load devices are shown at the outboard ends of the bars. Protective screens around the test fixture were removed to permit photography.

Fig. 6—HILL TEST SCHEDULE. The 7-11 hill test route is outlined on this aerial view of the GM Proving Grounds at Milford, Michigan.

mounted on a dynamometer. Every three minutes a magnetic tape signal applied 1,000-psi line pressure to the brake shoes and the drum speed was controlled to decrease from 100 mph to a complete stop in seven to eight seconds. The information gained from this test contributed to the final development of the brake drum structure.

Durability Tests Performed at Proving Grounds

The facilities of the General Motors Proving Grounds at Milford, Michigan, Mesa, Arizona, and Pike's Peak, Colorado, afforded Oldsmobile engineers the opportunity to evaluate the ride, handling, performance, safety, and durability of the Toronado with maximum security. Road systems at the various Proving Grounds simulate every type of road throughout the United States. The development of the Toronado involved over 1-1/2 million test miles on these roads. The test miles were composed of various durability schedules and many specialized tests.

Hill Test Schedule

One of the most important durability schedules in the development of the front drive system was the 7-11 per cent schedule (Fig. 6). This schedule was designed primarily as a test for the transmission, differential, and drive axles. It consisted of full throttle standing starts on 7 and 11 per cent hills, decelerations on the 11 per cent hill, and full throttle reverses backing up the hill to produce reverse loading conditions on the drive components. Both hills had some washboard surface to intensify drive line shock loading. The schedule also consisted of repeated passing maneuvers on the high speed track to test the transmission downshift capability as well as the drive system load capacity.

Durability Schedule

The regular Proving Grounds durability schedule simulated the types of driving a motorist might encounter in all parts of the country during the lifetime of a car. This schedule consisted of many miles driven on the high speed track, Belgian block road (Fig. 7), asphalt crown road, gravel roads, and hills up to 21 per cent grade. The vehicle also was driven through a salt bath once every cycle. This schedule furnished an excellent measure of the overall durability of the Toronado.

J-Turn

The rugged front suspension of the Toronado resulted from many hours of exhaustive testing. The turning and driving forces normally distributed between a front and rear suspension are virtually all absorbed in the Toronado's front suspension. J-turn testing was of utmost importance in the development of reliable front suspension components.

Fig. 7—BELGIAN BLOCK ROAD. This road at the GM Proving Ground is constructed of rectangular stone blocks laid in an uneven pattern to form a road surface. The contour of the road provides various turns and dips. The Belgian block test schedule provides accelerated testing of structural items such as body, frame, and all suspension components. The severity of the course is such that low test mileage often is sufficient to prove the durability of components on test.

Fig. 8—J-TURN TEST. During a J-turn test, such as the one shown here being conducted at the GM Proving Ground, both the driving and turning forces are absorbed in the front suspension. The car undergoing a J-turn test is driven at approximately 50 mph, then is placed quickly into a locked turn with power maintained.

J-turn testing consists of driving a vehicle at 50 mph and quickly going into a locked turn with power being maintained (Fig. 8). The resultant extreme bending loads are a measure of the front suspension components.

Traction Test

There had been speculation expressed about the traction of a front wheel drive vehicle because of fore-and-aft weight transfer, especially on steep inclines. Analysis showed that with a properly designed suspension system and weight distribution the traction would be extremely good. Traction tests were made during accelerations and decelerations on all types of roads: hills up to 60 per cent grade, dry pavement, gravel, ice, and snow. The Toronado performed as expected—excellently—under all road conditions.

Joint Seal Test

Early in the development program, a problem in the drive shaft universal joint rubber sealing boot was recognized. The problem was seal ballooning at high speed caused by high centrifugal force on the joint lubricant. The high viscosity of the lubricant prevented it from flowing uniformly around the boot seal and resulted in a concentrated mass. As speed increased, the orbital path of the mass also increased, distorting the seal. To assist in the investigation, a Proving Ground test was used that placed one wheel on ice and the other on dry pavement. Full throttle acceleration permitted the wheel on ice to attain high speed due to differential action. Through this test, and the use of high speed photography, the problem was diagnosed and corrected.

Additional Road Tests Conducted

Due to the security maintained during the development of the Toronado, most test work was done in the laboratory and at the GM Proving Grounds. However, road trips were accomplished by using preliminary test cars built with all operating components from the Toronado and disguised as present model cars by using production sheet metal and bodies.

In addition, considerable ride and development work was done on prototype cars on abandoned back roads in the Phoenix, Arizona, area. Oldsmobile leased a portion of an old Indian reservation and set up a small camp to do mechanical work. Ride evaluations were made on the reservation roads.

Tire Tests

Since both driving torque and steering are transmitted through the Toronado front wheels, considerable emphasis was placed on the proper selection of tires. To assist in this development, evaluation work was done at a tire company's Texas test track. An example of tire characteristics evaluated in Texas was the effect of tread pattern on traction. Approximately 45 different tire designs were evaluated.

Brake Tests

After a brake system had been developed that satisfactorily completed all Proving Ground tests, a trip was scheduled to Los Angeles. The purpose of the trip was to reaffirm Proving Ground test results. The Los Angeles schedule involved driving alternately in city and freeway traffic. This pattern was followed on a prescribed 192-mile schedule. Brake effectiveness and temperature checks were taken at 19 points throughout the schedule. After each 2,000 miles, the brakes were checked for heat damage and wear. This exaggerated schedule results in extremely high wear rates when brake cooling is inadequate. The Toronado finned drums and ventilated wheels proved outstanding.

Pike's Peak Tests

The Pike's Peak mountain climb is a test that all Oldsmobile car models must pass before being released to the public. The test is very effective for evaluation of the carburetion, engine, transmission, differential, and brakes. The Toronado was driven up Pike's Peak several times, including winter runs which helped confirm the Toronado's excellent snow traction and hill climbing abilities.

Summary

The testing and development of the Toronado was aided greatly by accelerated tests in the laboratory. These tests were conceived to simulate the operation of the car under severe conditions. The use of laboratory tests shortened the test time required to develop a successful unit as many valuable test miles on the road were not lost due to premature failures.

Final tests at the Proving Grounds required that every part must complete each durability schedule without failure. Multiple installations were made to test variables between parts and to cover the various accessory combinations.

Development of Assembly Procedures for the Toronado

Production of the Toronado on a volume basis began August 16, 1965. This marked the culmination of 19 months of intensive preparation involving assembly planning; testing of facilities, systems, and methods; and the training of personnel. The Toronado production was planned to be accomplished with facilities separate from those used in the production of other Oldsmobile car models. Process engineers had to plan conveyor systems, determine the area needed for assembly operations, and design conveyor fixtures and assembly tooling. The results of these preliminary plans were tested under simulated assembly operations at Oldsmobile. Further refinements were made and assembly operations perfected during the pilot line production. The months of detailed planning, testing, and evaluation were brought to a successful completion with the start of actual production.

THE effective preparation for assembling new model cars at Oldsmobile Division is based on a close working relationship between the Manufacturing and Product Engineering Departments. During the planning of assembly operations, the Methods and Layout Section of the Manufacturing Department (Fig. 1) uses advanced design information obtained from Product Engineering. Methods engineers, in turn, furnish Product Engineering with their evaluations concerning the practicality of preliminary designs from an assembly standpoint so that assembly quality and cost factors can be considered and comprehended in finalized designs.

Overall Facility Requirements Considered First

Process engineers at Oldsmobile began planning for the Toronado assembly in January 1964. This left a lead time of 19 months before the scheduled start of actual production in August 1965. The first stage of assembly planning centered on overall facility requirements for production.

The major design characteristics of the Toronado that differed from current Oldsmobile production cars were the front wheel drive and the sub frame. After considering these characteristics, it was determined that separate assembly facilities should be planned for the Toronado rather than modify the existing Oldsmobile assembly system at Lansing, Michigan. One factor influencing this decision was that integration of Toronado production with current Oldsmobile model cars would result in varied work assignments. The cost of constructing separate assembly facilities was offset by the fact that assembly integration would require a substantial investment to modify the existing assembly system, particularly in the chassis line and engine dress-up areas.

Assembly Concepts Developed

Before the development of facilities planning could proceed, process engineers first had to develop ideas on the assembly methods to use. This required studies of all available product design information, particularly that related to the chassis and front wheel drive components. Using this product information process engineers developed and evaluated several alternate assembly systems before determining the best overall method of assembly.

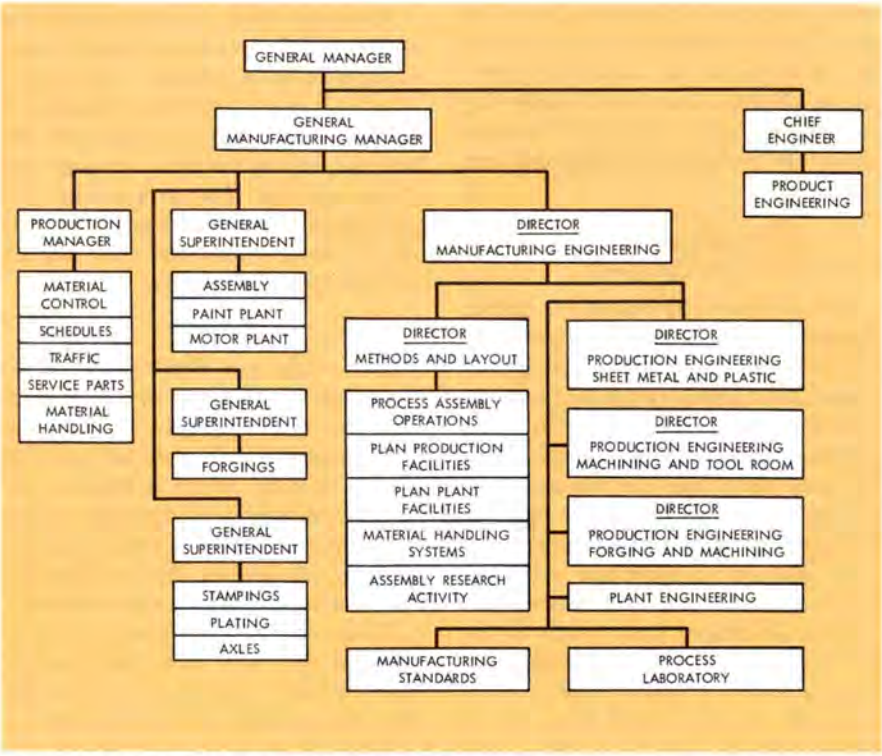

Fig. 1—ORGANIZATION OF OLDSMOBILE DIVISION MANUFACTURING OPERATIONS.

By DONALD R. DOWNIE
Oldsmobile
Division

Product design information translated into systems of assembly

Chassis Conveyor Selected

For the chassis and front wheel drive assembly operations, a floor-supported conveyor was selected (Fig. 2). This conveyor was to have details on its pallets to position the sub frame and locate the rear axle. The body could be dropped onto these components and secured to the underbody. The wheels then would be put on and the car set down on its wheels for the remaining assembly operations on the final line. It was determined from product design studies that the body hard trim operations could be performed while the bodies were being conveyed on jacks, as is usually the case.

Conveyor Lengths Estimated

The next item on the agenda of the process engineers was establishing conveyor length requirements. To estimate these requirements, process engineers established the work that would be performed in major areas of assembly, such as body hardware, chassis, engine dress-up, and final line after body drop.

Work content plus line rate were the two basic factors that resulted in the development of a preliminary calculation of the conveyor line length required in each assembly area. These line length estimates, made in February 1964, were considered to be preliminary. It was recognized that parts storage along the line might dictate alteration of these plans at a later date when additional product design information would become available in greater detail.

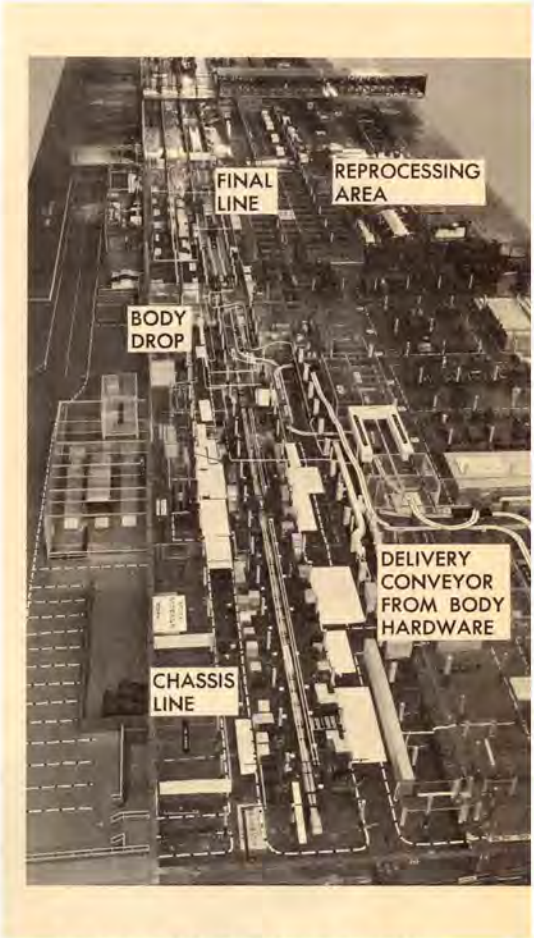

Fig. 3—THREE-DIMENSIONAL DISPLAY BOARD. A major aid in planning production facilities for the Toronado was a three-dimensional display board developed by Oldsmobile's Plant Layout Department. Conveyor routings, work stations, and assembly area requirements were indicated.

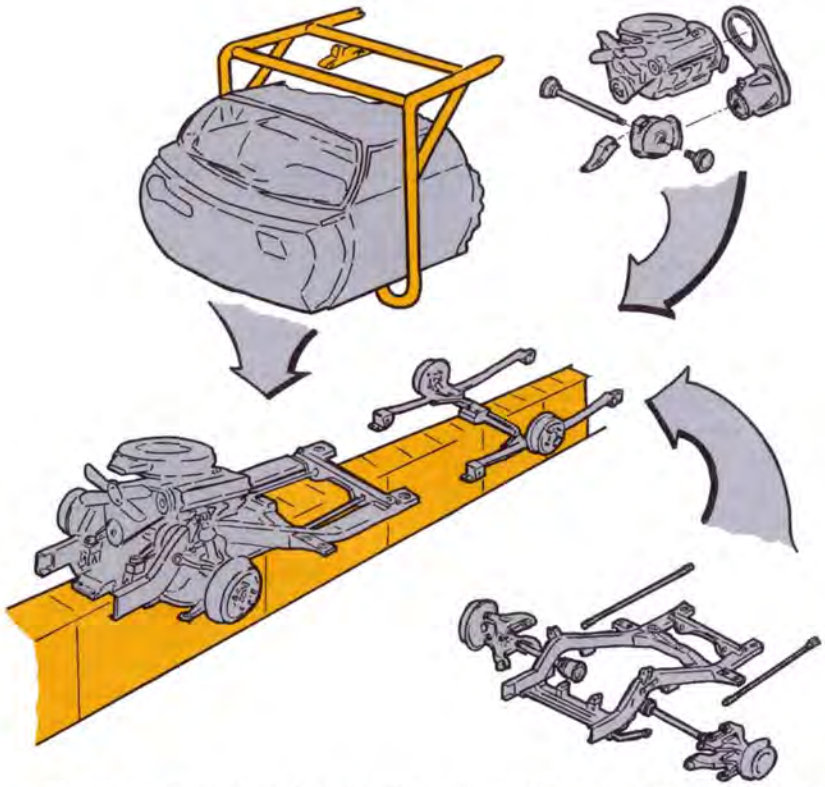

Fig. 2—FLOOR-SUPPORTED CONVEYOR FOR CHASSIS AND FRONT WHEEL DRIVE COMPONENTS. One of the first concepts developed for the Toronado assembly was the selection of a floor-supported conveyor for assembly of the chassis and front wheel drive components. The body would drop onto these components, then be secured to the underbody.

Facilities Planning Completed

From the basic processing information of conveyor types and estimated lengths, Oldsmobile's Plant Layout Department set to work to fit the planned types of conveyors and their established lengths into existing buildings currently used for stock storage. Area requirements and

1 - TORONADO BODY FLOAT (240 BODIES -- 42,000 SQ FT)
2 - DOWN TO SECOND FLOOR BODY HARDWARE LINE
3 - FROM THIRD FLOOR BODY FLOAT
4 - TORONADO BODY HARDWARE (22 WORK STATIONS -- 54,000 SQ FT)
5 - TO FIRST FLOOR CHASSIS LINE
6 - INTEGRATED BODY RECEIVING AREA
7 - FROM SECOND FLOOR BODY HARDWARE LINE
8 - BODY DELIVERY TO CHASSIS LINE (14 WORK STATIONS--10,000 SQ FT)
9 - FRAME AND CHASSIS ASSEMBLY (24 WORK STATIONS--52,000 SQ FT)
10 - FINAL ASSEMBLY (18 WORK STATIONS -- 32,000 SQ FT)
11 - MECHANICAL REPAIR (8 WORK STATIONS -- 12,000 SQ FT)
12 - TO INTEGRATED SHIPPING LINE
13 - INTEGRATED SHIPPING LINE
14 - CAR WAXING
15 - WHEEL AND TIRE ASSEMBLY
16 - NEW PAINT FACILITIES IN NEW 168,000 SQ FT BUILDING ADDITION
17 - INTEGRATED BONDERITE AND PRIME

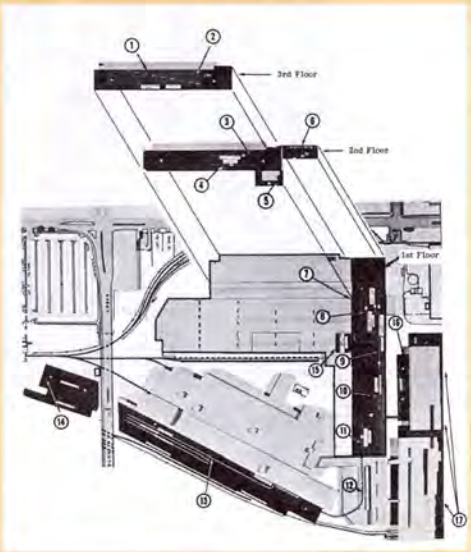

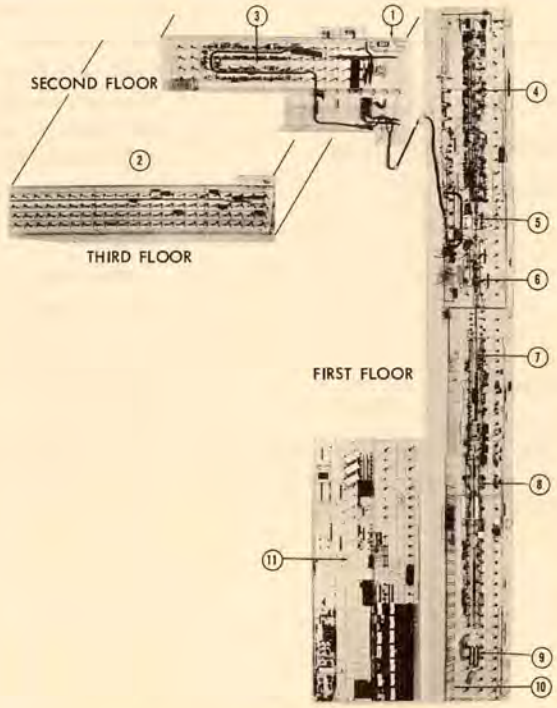

1 - BODY RECEIVING
2 - BODY FLOAT
3 - BODY HARDWARE LINE (16 WORK STATIONS)
4 - CHASSIS LINE (13 WORK STATIONS)
5 - BODY DROP
6 - OUTBOARD KNEE PITS
7 - FINAL ASSEMBLY LINE (22 WORK STATIONS)
8 - OUTBOARD AND INBOARD PITS
9 - TOE-IN AND CASTER, CAMBER SET
10 - TEST ROLLS
11 - REPROCESSING AREA

Fig.4—ASSEMBLY FACILITIES PLANNING. The decision to use separate assembly facilities for the Toronado, rather than modify existing facilities and completely integrate the Toronado assembly with other Oldsmobile car models, required detailed planning and fitting of conveyors into existing buildings used for stock storage. In March 1964 a preliminary plan was developed (left) for review by management. As additional product design information became available and work continued on operation analysis, various changes were made in a number of conveyor work stations. This resulted in a revision of the preliminary plan. By July 1964, the major assembly facilities planning was completed (right) and detailed conveyor routings were issued for the development of engineering construction.

conveyor routings were determined and an overall preliminary conveyor and assembly layout plan was developed in March 1964.

All changes in facilities made from the time of initial planning were shown on a three dimensional display board (Fig. 3). As process engineers obtained more detailed product design information in the spring of 1964, the operations to be performed at each work station were developed and indicated by labels on the display board. All management reviews of proposed systems, facilities, or changes were held around this up-to-date display that gave an overall view of the Toronado assembly complex being developed. By July 1964 major facilities planning was complete and detailed conveyor routings were issued for development of engineering construction. A comparison of the March preliminary plan with the final system planning of July showed that considerable changes were made during this period of evolution (Fig. 4).

Chassis Line Conveyor Fixtures Developed

The chassis assembly conveyor developed to support the sub frame and rear axle has three sets of pallets assembled into the conveyor chain for each assembly station. The pallet sets are used to mount fixtures that support the chassis at the frame front cross bar, frame rear cross bar, and the rear axle (Fig. 5). These three cross members were selected as support locations to attain maximum stability after consideration of fixture width limi-

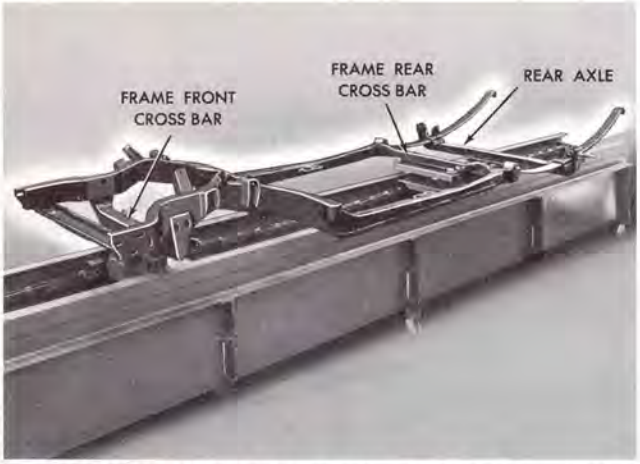

Fig. 5—CHASSIS ASSEMBLY CONVEYOR FIXTURES. Assembled into the chassis assembly conveyor chain were three sets of pallets used to mount fixtures that support the frame front and rear cross bars and the rear axle.

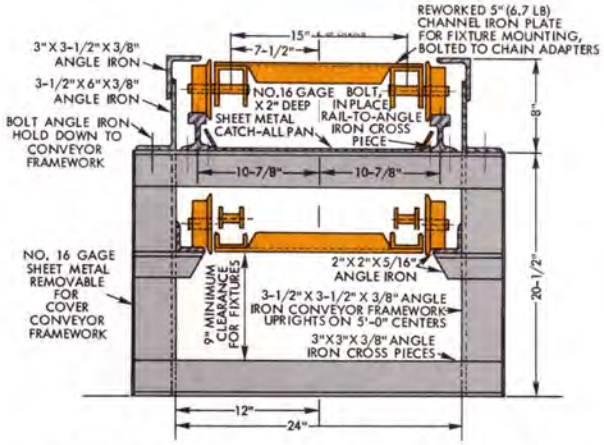

Fig. 6—BOLTED AND WELDED CHASSIS ASSEMBLY CONVEYOR CROSS SECTION.

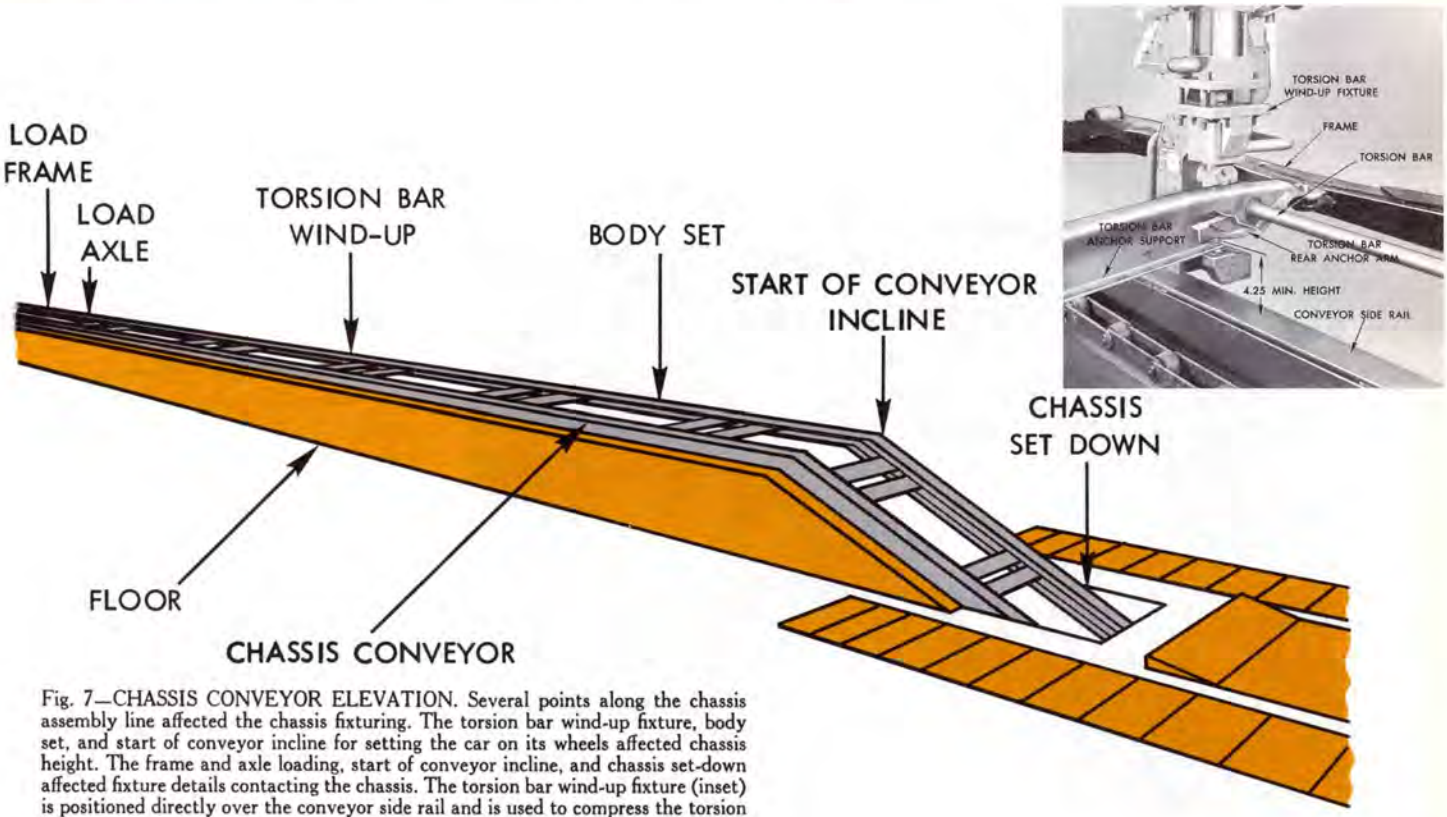

Fig. 7—CHASSIS CONVEYOR ELEVATION. Several points along the chassis assembly line affected the chassis fixturing. The torsion bar wind-up fixture, body set, and start of conveyor incline for setting the car on its wheels affected chassis height. The frame and axle loading, start of conveyor incline, and chassis set-down affected fixture details contacting the chassis. The torsion bar wind-up fixture (inset) is positioned directly over the conveyor side rail and is used to compress the torsion bar anchor arm. The minimum clearance between the anchor arm and the conveyor was established by the thickness of the wind-up fixture detail (3.25 in.) plus an allowance for locating and removing the fixture (1.00 in.).

tations determined by the conveyor. The conveyor return clearance limited the fixture to a width of 24 in. and a height of 9 in. (Fig. 6). The frame front cross bar was used as a support point primarily because of its size and strength, since the majority of the chassis weight would be concentrated at its forward end. The use of the frame rear cross bar and rear axle provided stability to the chassis.

Prior to the start of the actual fixture design, a general concept of the fixture had to be developed. First, the height of the chassis above the conveyor was established then the means for locating it on the conveyor was determined. Several factors in the chassis line system were found to affect the height and location dimensions (Fig. 7). Limitations were placed on the height of the frame and axle at the torsion bar wind-up operation (Fig. 7—inset), where a fixture is used between the chassis and conveyor to compress the anchor arm.

At the point of body set-down onto the chassis, two height factors required consideration. One factor required that clear-

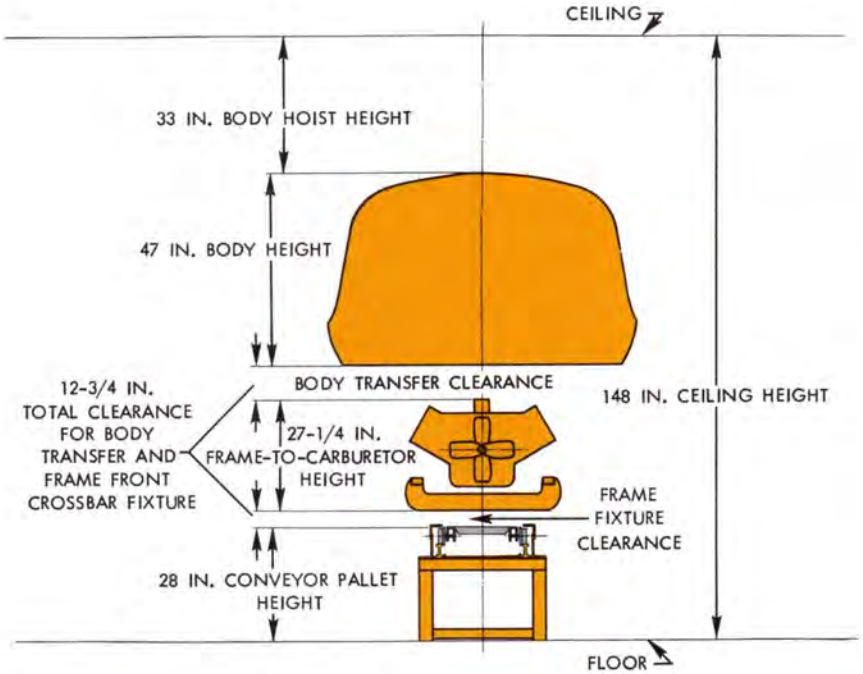

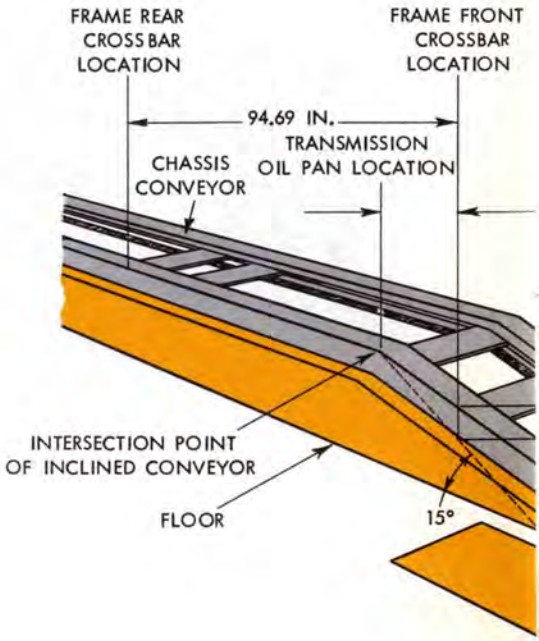

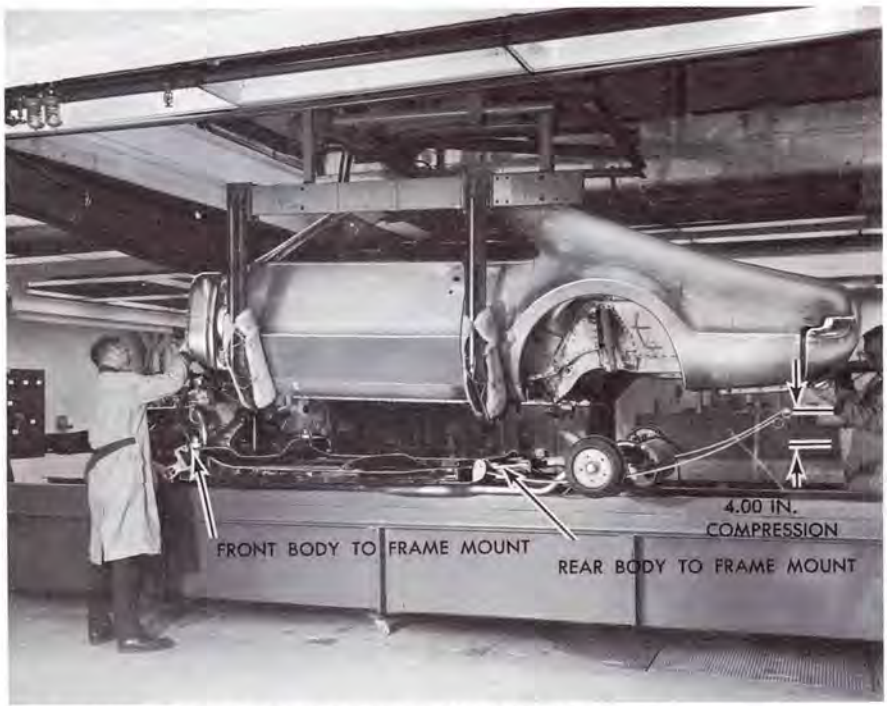

Fig. 8—BODY SET-DOWN ONTO CHASSIS CONVEYOR. When the design of the chassis fixture was started, the exact height of the body at its maximum elevation during set-down had not been established because the body hoist also was being developed during this period. The hoist height was estimated to be 33 in. (top). The body height and frame-to-carburetor height was obtained from product design information. With a pallet height of 28 in., the height that remained for the body-to-engine clearance and front cross bar support fixture height was 12¾ in. The body had to clear the engine and the overall objective of the process engineer at this point of the assembly development was to minimize the height of the fixture to obtain maximum body transfer clearance.

Also of concern to the process engineer was how to set the rear axle so that the rear spring shackle could be assembled easily to the body and that adequate support could be provided for the body after set-down. This was accomplished by setting the rear axle at such a height that the rear spring eye was compressed down 4.00 in. when the body was set onto the frame (bottom). A nominal force of approximately 130 lb was applied to the body on the spring. Since the center of gravity of the body was forward of the rear body-to-frame mount, the 260 lb applied to the aft end of the body by the two springs was considered sufficient to assure contact of the body to the frame at the front mounts until the body-to-frame securing operation was completed.

ance be maintained between the body and chassis during transfer over the chassis (Fig. 8—top). The second height factor at the body set-down point was the relative height of the axle with respect to the frame. The primary objective in determining these relative heights was to set the rear axle in such a position that the rear spring shackle could be assembled easily to the body and provide adequate support for the body after set-down (Fig. 8—bottom).

The movement of the chassis onto the inclined section of the conveyor, which sets the car on its wheels, required that the intersection point of the horizontal and inclined conveyor clear all chassis components. To determine if clearance actually existed, a transparent layout was made of the frame, axle, and leaf spring using the relationship necessary at body set-down. The layout then was overlaid and positioned on a conveyor outline by applying the various height restrictions. By simulating on design layouts the movement of the chassis onto the inclined conveyor intersection, an interference of approximately one in. was found at the transmission oil pan as it passed the intersection point. Attempts were made to

Fig. 9—INCLINED CONVEYOR ANGLE. During assembly planning, an interference of approximately one in. was found to exist at the transmission oil pan as it passed the intersection point of the inclined conveyor. The interference condition was eliminated by reducing the angle of the inclined conveyor section from 15° to 8°. The design change in conveyor angle raised the frame front cross bar 3.56 in. Elevating the frame at the front in this manner raised the chassis sufficiently to eliminate the interference of the oil pan with the conveyor that had existed at this location with the 15° incline.

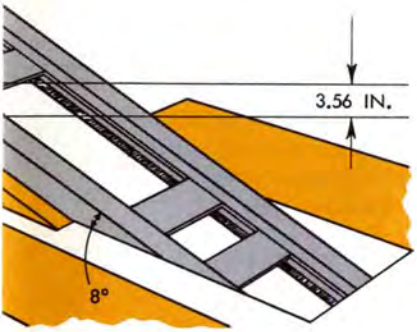

eliminate the interference by increasing the height of the chassis on the conveyor. This resulted in requiring the fixture details to be greater than the nine-in. maximum height clearance in the conveyor return (Fig. 6). Since building of the conveyor had not yet begun, the transmission oil pan interference was eliminated by changing the inclined conveyor angle from 15° to 8° (Fig. 9).

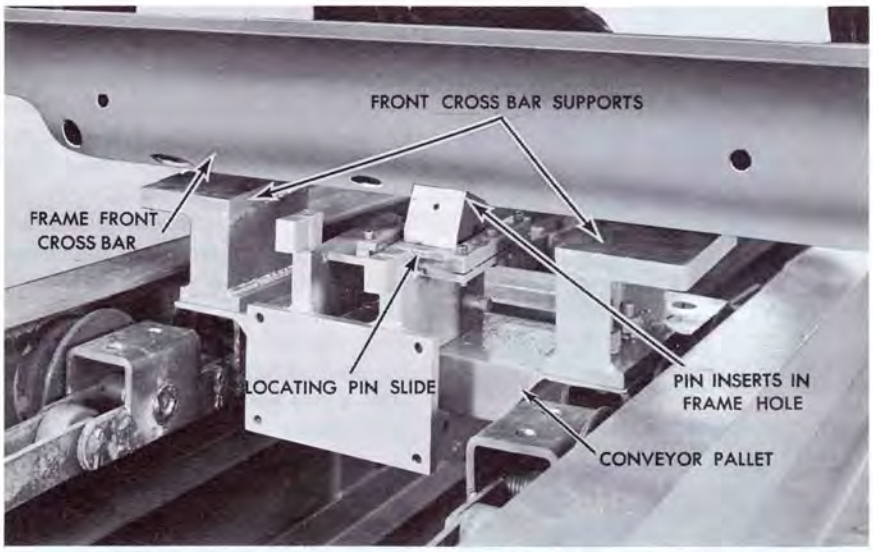

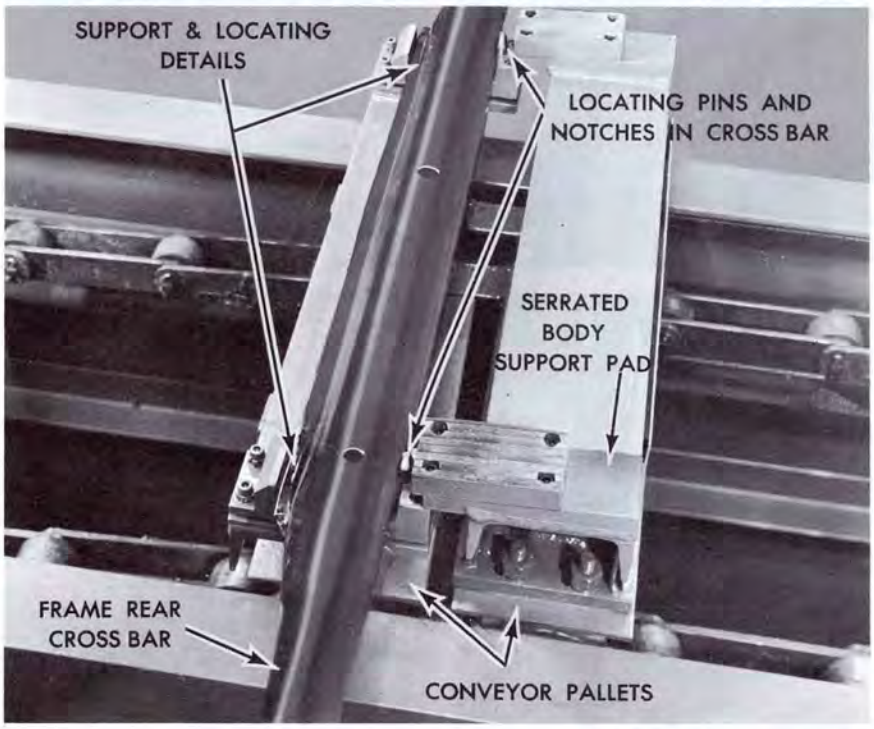

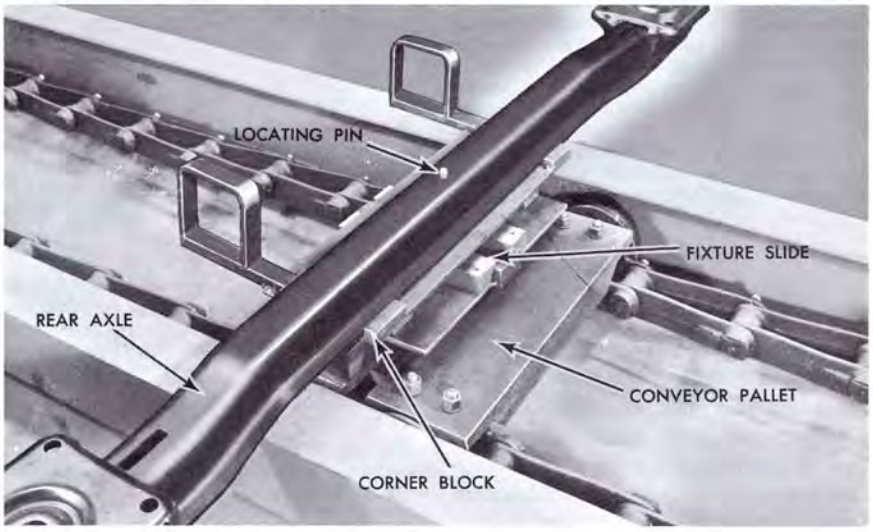

Fig. 10—CHASSIS CONVEYOR FIXTURES. The front frame cross bar fixture (top) supports the frame at 12 in. from the centerline of the car and locates the frame cross bar by means of a pin inserted into the engine mount nut access hole. The locating pin is movable front-to-rear to allow for variations in frame length. The rear frame cross bar fixture (center) is the fixed locator and has pins that fit in notches in the cross bar flange for cross bar positioning. Serrated pads on the rear cross bar fixture were added to support the weight of the body approximately 0.25 in. above the frame so that the rear frame cross member would not be damaged when the body was set. The rear axle fixture (bottom) also slides front-to-rear to accommodate spring, axle, and frame dimensional variations. A pin located in a hole in the bottom of the axle is used for axle cross bar positioning. Four blocks at the fixture corners aid assembly of the axle to the fixture. The notches in the rear cross bar and the hole in the axle were requested and incorporated especially for locating these components in the chassis fixture.

Fig. 11—LABORATORY TESTING OF ASSEMBLY OPERATIONS. The facilities of Oldsmobile's laboratory used to finalize assembly planning for the Toronado included conveyor sections, fixturing, and tooling (top). Of particular importance during the laboratory testing phase was developing the final methods for setting the Toronado body onto the frame (center). The laboratory also provided facilities for tryout of final assembly line operations including center and outboard pits (bottom).

Locating the chassis on the conveyor required considering the loading of the frame and axle where ease of assembly to the fixture would be the primary objective. In addition, the movement onto the inclined conveyor dictated that allowance be made for rotation of each fixture through the 8° angle taken on the inclined conveyor. At set-down of the body on its wheels, it was necessary that the fixture free itself as it disengaged from the frame cross bars and rear axle and passed into an opening in the floor (Fig. 10).

The chassis-to-conveyor relationship and locating requirements, plus other factors such as body weight, parts variations, and stability requirements, established the basic framework within which the fixture design was developed. Projects such as this were typical of those associated with the tooling necessary for assembly of the Toronado and illustrate the coordination necessary between process, tool, and product engineers in working out details of the new assembly system.

Product Designs Reviewed By Manufacturing Personnel

In October and November 1964, a series of product design review seminars was conducted by assembly process engineers. Product designs continually being released were reviewed and added to Manufacturing's knowledge of the Toronado. The primary objective of such reviews was to establish a cornerstone for quality production by determining that designs were practical from an assembly standpoint.

Oldsmobile's programs for building quality cars on a production basis require design evaluation by manufacturing personnel who advise product engineers of assembly procedures affected by design. Any design problems then can be resolved through changes before start of production. Assembly methods and sequences and facilities requirements and tooling also are reviewed during these meetings. As in all planning for the Toronado, assembly process engineers were continually interpreting product designs, relating them to their assembly system, and planning to change or update the system as necessary.

Assembly Procedures Tested in Laboratory

The testing of tooling and assembly sequences for production of a new model car at Oldsmobile is performed in a laboratory prior to the start of production. For the Toronado production plan-

STATION AND BAY NUMBER	OPERATOR	ELEMENT DESCRIPTION
1--2C	1 & 2 R & L	ASM FRAME TO CONVEYOR FIXTURE (TURNOVER 50%) ASM AXLE TO CONVEYOR FIXTURE
2--3 & 4C	3 L	S/A STEERING GEAR & PITMAN ARM ASM STEERING GEAR TO FRAME QUALIFY IDLER STUD LOCATION ASM SHIMS & L/A LINKAGE TO FRAME & PITMAN ARM ASM FRONT BRAKE HOSE BRKT & (1) CLIP *ASM JUNCTION BLOCK TO FRM W (1) SCREW
2--3 & 4C	4 R	S/A FRONT BRAKE PIPES & JUNCTION & PLACE ON FRAME ASM FRONT BRAKE HOSE BRKT & (2) CLIPS TO FRAME STAMP SERIAL NUMBER ON FRM IN (2) LOCATIONS ROUTE FUEL & RETURN HOSE THROUGH FRAME
2--3 & 4C	5 R	*PRESS (1) BUSHING INTO REAR SPRG, L/A INSULATORS TO SPRG L/A SPRG. TO FRM W (1) BOLT & NUT ASM SPRG & CLAMP TO AXLE W (4) BOLTS & NUTS & SECURE W TAPE PRESS SPINDLE INTO AXLE *RAISE AXLE, POSITION HEIGHT FIXT., SECURE BUSHING BOLT & REMOVE FIXT.
5C	6 R	*ASM STABILIZER TO FRM W (2) BOLTS & (1) BRKT POSITION CROSS CAR W SPACING FIXT. L/A LOWER ARM TO FRM L/A ASM UPPER ARM TO FRM & SNUG DN NUTS L/A SHOCK TO LWR ARM & FRM W (1) BLT & (2) NUTS

Fig. 12—OPERATION DESCRIPTION SHEET. Based on the results obtained during laboratory testing of assembly operations, operation description sheets were prepared, such as the typical one shown here.

ning, the laboratory was equipped with new conveyor sections and facilities to simulate production line conditions.

In December 1964 a Toronado prototype vehicle was obtained for laboratory testing of assembly plans. Particular attention was given to major operations, such as setting of the body onto the frame and rear axle and securing of the chassis components to the underbody (Fig. 11). Operation sequences were developed and tested by thorough and repeated preliminary build-ups. Operation description sheets then were formulated based on this preliminary work (Fig. 12).

Pilot Line Production Begins

By April 1965 the major Toronado production facilities, planned the previous spring, had been engineered, constructed, and installed in an area separate from the current 1965 model car production. This work was completed while tests were being performed in the laboratory.

The second phase of assembly testing now was ready to begin. This involved building 38 pilot Toronados using the new assembly facilities. During this phase, process engineers, plant engineers, and production supervision reviewed the facilities and cooperated to perfect the system. Pilot line production lasted a period of six weeks and ended in May. It afforded the opportunity to train additional personnel and to test all facilities and tooling on a moving line and allowed lead time between May and August to complete any necessary improvements before the start of final production.

Assembly Procedures Completed for Production Start-Up

Oldsmobile's detailed plan for production start-up, referred to as *coordinated assembly planning*, is developed approximately one to two months before actual production begins. The term *coordinated* is an apt description because the resulting plan is based on the team work of process engineers and production supervisors.

The objectives of the coordinated assembly planning were to: (a) specify work assignments at start-up, (b) direct material flow to the proper assembly line

Fig. 13—DETAILED ASSEMBLY LINE PLANNING. Development of detailed assembly planning took place approximately one to two months before actual start-up of Toronado production. Scaled layouts of the assembly line, shown below, were made to indicate the location of operators as planned on the operation description sheets. Parts to be used at each work station then were listed (right). In this typical example of a parts list, the area location *5-21S* for part number *1980004* means that the part should be transported down aisle 5 and delivered to bay number 21-south. Some of the other information shown pertains to codes for visual aids at each station, container location within a work place area, and the type of package in which parts are to be received. This information was used to direct hundreds of different parts to proper locations on the assembly line and to prepare work place layouts (bottom right). The work place layouts indicated the arrangement of all facilities and stock positioning at each line station.

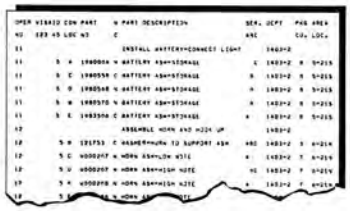

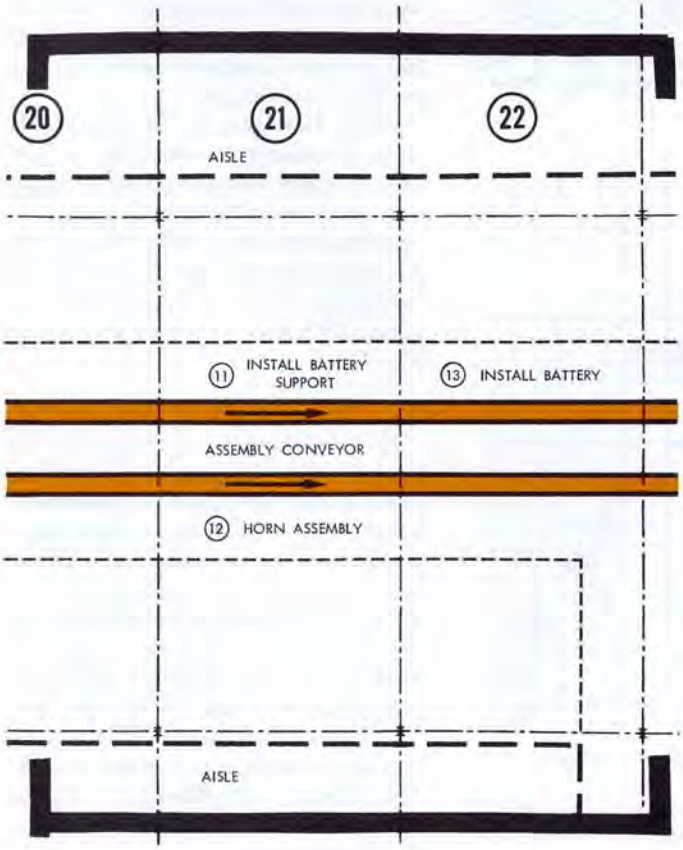

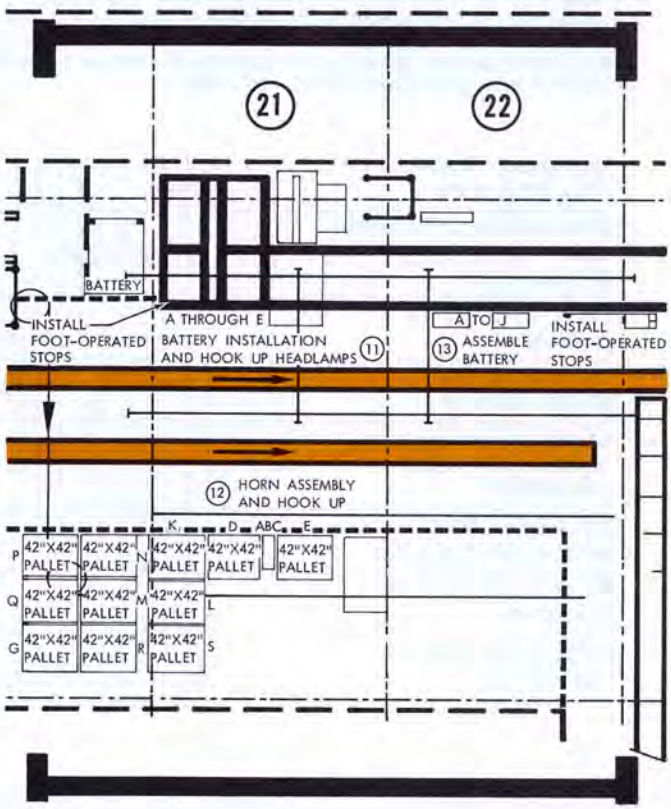

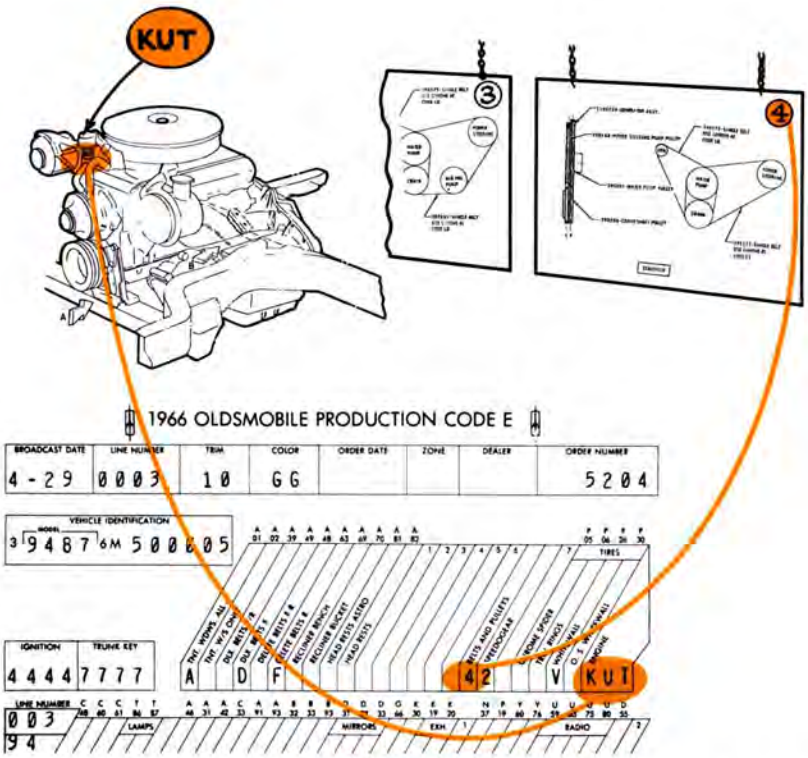

Fig. 14—OLDSMOBILE ASSEMBLY BROADCAST SYSTEM. This system tells production personnel what specific parts are to be assembled to each of many different car models. Information concerning each car to be built is converted to a coding system by a computer. These codes then are broadcast by a teletype system to several areas in the assembly plant. The codes are automatically typed on pre-printed forms as shown in the illustration. The forms accompany the units (body, engine, or chassis) being conveyed on the assembly line. Operators along the line read the codes for the items which they are to assemble and select parts corresponding to these codes. For example, engine code *KUT* on the broadcast system for job number 3 tells the operator which of several different engines to schedule for that car. Further down the assembly line, an operator assembling accessory drive belts to the engine determines which of many different belts to assemble by reading code 4 and selecting belts as instructed on display board number 4 suspended along with other boards at the work station.

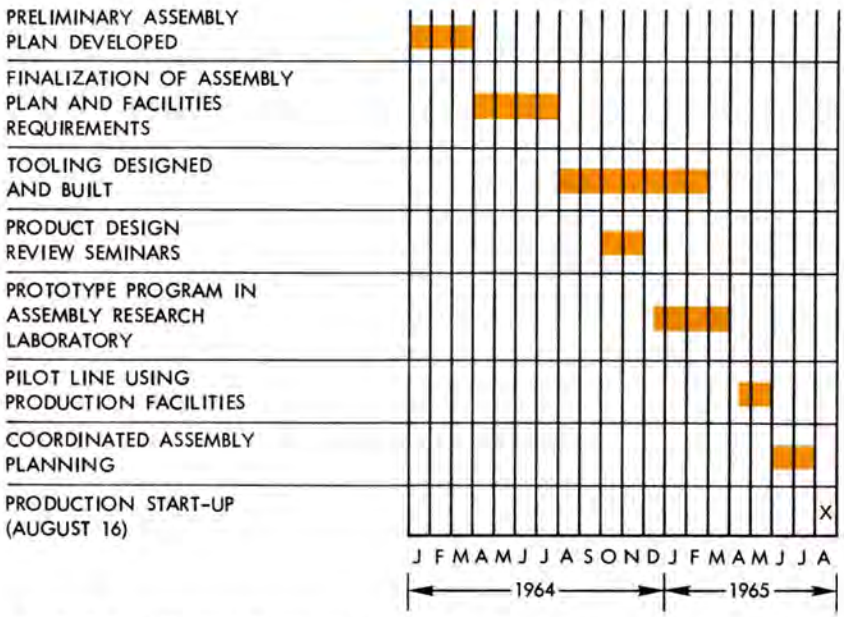

Fig. 15—TOTAL ASSEMBLY PLANNING SCHEDULE. This chart summarizes the major phases of Oldsmobile's Toronado assembly planning. The phases were scheduled over a period of 19 months prior to actual production start-up.

locations, and (c) arrange such items as benches and tools at each work station to assure proper work place layout.

Such detailed planning was part of a program to build consistent quality throughout the production run. The process engineers and production supervisors first determined the work elements and stock requirements for each operator at start-up. Operator numbers were assigned on scaled layouts of the assembly line (Fig. 13—left). Parts to be assembled at each station on the line were determined and designated on a listing board that showed the part number, description, department number in which it would be assembled, and the bay location where incoming shipments of each part would be delivered (Fig. 13—center). This parts summary was the basic source for directing the flow of approximately 1,500 different parts to proper locations on the assembly line. The parts usage information for each line station plus information concerning the type of containers in which parts were received also facilitated development of work place layouts (Fig. 13—right). All benches, stock bins, roller conveyors for handling palletized material, and other such items then were arranged according to these layouts for each work station, the material containers stocked with the correct parts, and operator assignments for start-up posted at each station.

Visual aids such as the Oldsmobile assembly broadcast system (Fig. 14) also were finalized during this stage of planning. With tested facilities and tools, an assembly system planned in detail, and a trained organization, the preparation for building the Toronado was completed by August 1965 after 19 months of planning (Fig. 15).

Summary

The development of the assembly concepts for the Toronado, the facilities planning and installation, and personnel training all were based on product design information that was translated by manufacturing engineers into systems of assembly. Each phase of planning such as facilities preparation, tool design, prototype build-ups in the laboratory, pilot line production, and finally the detailing of a start-up plan were parts of a systematic approach to assure a pre-tested and sufficient system for assembling the Toronado on a production basis with traditional Oldsmobile quality.

A Typical Problem in Engineering:

Determine the Individual Chain Link Forces in a Chain Drive Power Transfer Mechanism

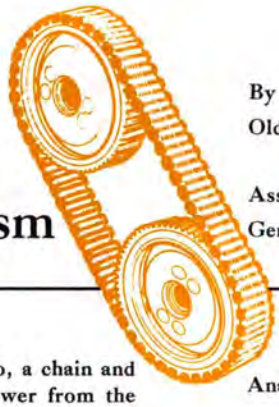

By FREDRIC C. ALDRICH
Oldsmobile Division

Assisted by Gerhard W. Sood
General Motors Institute

To provide driving power to the front wheels of the Oldsmobile Toronado, a chain and sprocket cross-drive arrangement is used to effect a 180° transfer of power from the torque converter connected to the engine crankshaft to the transmission gearing and final drive unit located alongside the engine. During the development of the power transfer system, an analysis was required of the transmitted and inertial forces acting on the individual chain links and sprocket teeth.

Analyze transmitted and inertial forces in individual chain links

THE arrangement of the engine, transmission, and final drive unit in Oldsmobile's front wheel drive Toronado was influenced by several factors, notably component size and shape and space availability. The Toronado's engine is mounted longitudinally in the car with the center main bearing directly over the front wheel centerline, as indicated in the following diagram.

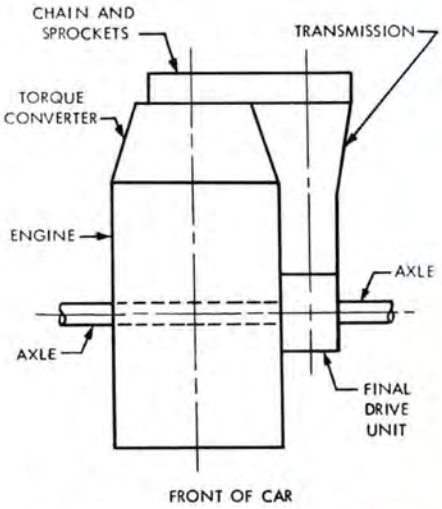

The automatic transmission is arranged so that the torque converter and input pump components are connected to the engine crankshaft directly at the rear of the engine and the transmission gearing is located alongside, and parallel to, the engine and converter. The final drive unit with a planetary differential is attached to the forward output shaft of the transmission. Axle shafts extend from both sides of the differential unit to the front wheels of the car.

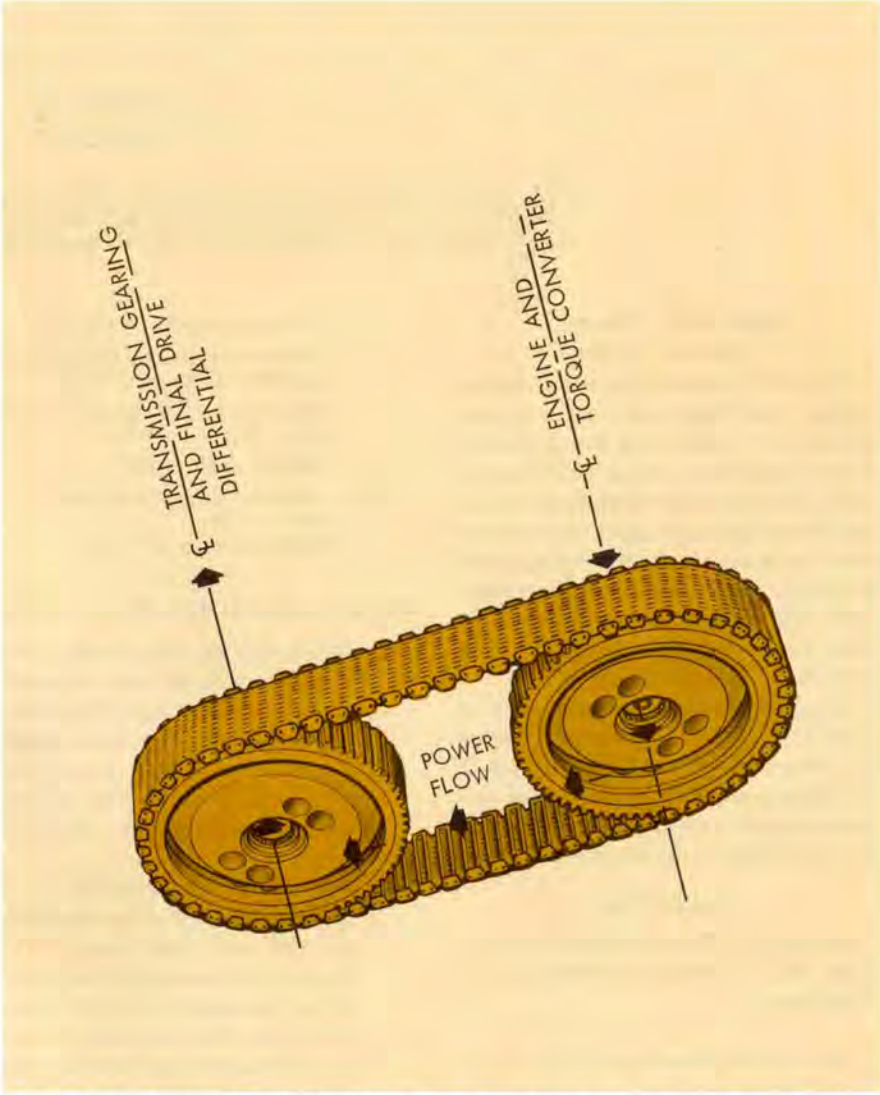

Fig. 1—CHAIN AND SPROCKET ASSEMBLY. The cross-drive assembly provides a 180° transfer of power from the torque converter which is connected to the end of the engine crankshaft to the automatic transmission gearing located alongside the engine. The chain has an average pitch of 0.375 in., is 2.0 in. wide, and 46.5 in. long.

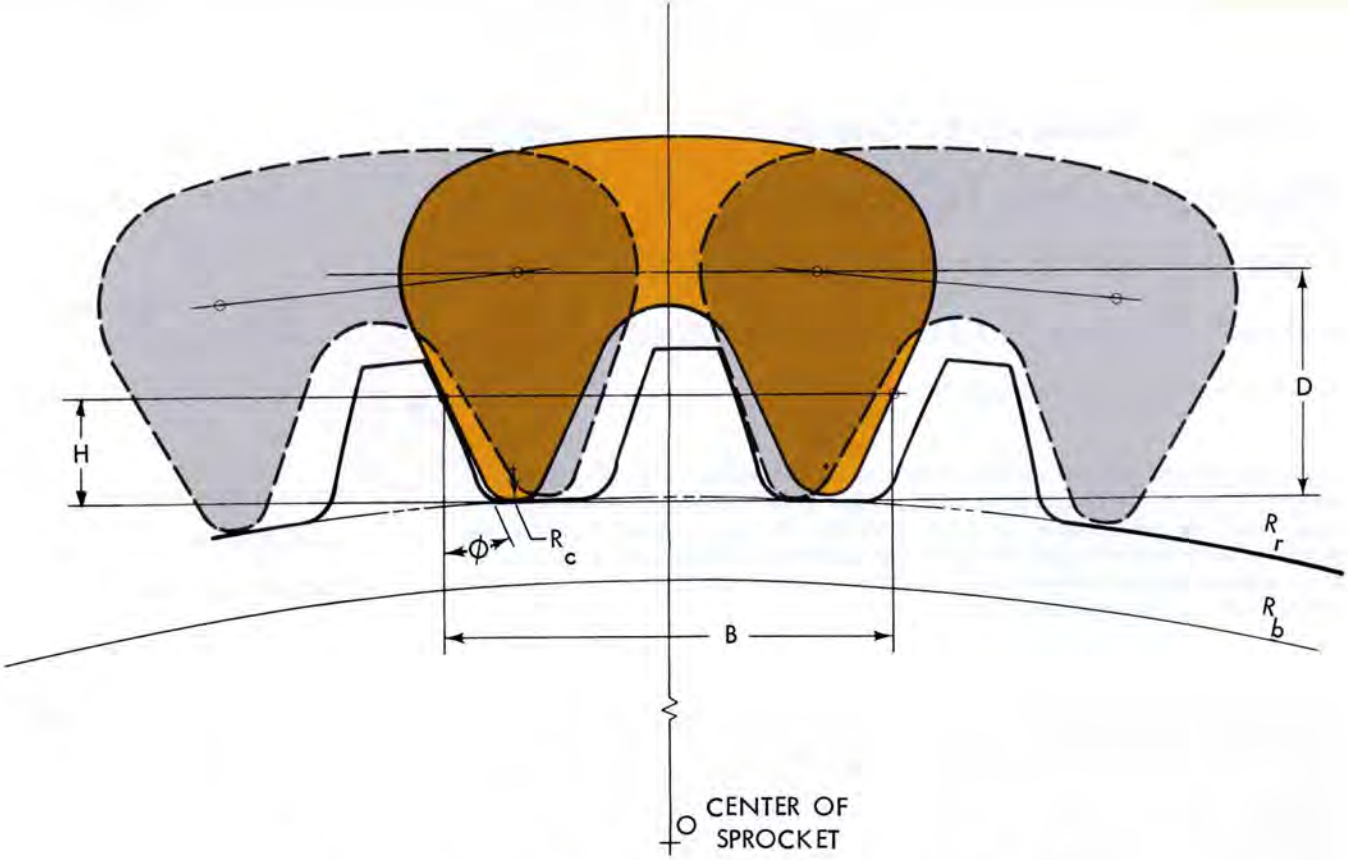

Fig. 2—CHAIN LINK AND SPROCKET TOOTH CONFIGURATION. Forces due to transmitted torque as well as the inertia of the chain itself must be considered in analyzing the total forces acting on the individual chain links and sprocket teeth.

Chain Drive Transmits Converter Torque

The 180° transfer of power from the engine to the final drive unit is accomplished by a chain and sprocket cross-drive arrangement with a speed ratio of unity. The silent type chain drive (Fig. 1) was chosen, instead of a gear type arrangement, because it provided the required durability and quietness of operation. This was established conclusively by many miles of testing, both on the proving ground and in the laboratory.

In addition to experimental proofs of reliability, the customary engineering approach of making a realistic analysis of the forces acting on important drive line components was applied. One of the components analyzed was the chain.

The Problem

Consider a chain and sprocket arrangement (Fig. 2) having the following basic dimensions:

R_r = root circle radius = 3.6220 in.

R_b = base circle radius = 3.5218 in.

N_t = number of teeth in each sprocket = 65

B = link width = 0.5625 in.

R_c = link contact radius = 0.04 in.

H = distance from link tip to link width dimension point = 0.132 in.

D = distance from link tip to centerline of link pins = 0.2854 in.

ϕ = link face angle = 25°

N_c = number of links or pitches in chain = 124

W = weight of chain = 6.4 lb.

The problem is divided into three parts:

1. Develop the equations for the forces acting on the individual chain links that are in contact with the sprocket teeth. Consider those forces which are induced by (a) transmitted torque and (b) inertia of the chain as it is deflected around the sprockets.

2. Demonstrate the use of the equations derived in Part 1 by tabulating the link and tooth forces. (The forces due to transmitted torque are to be calculated for each tooth beginning with the tooth adjacent to the tangent link leaving the driven sprocket, and using a torque induced initial chain tension of 1,000 lb. The inertial forces are to be calculated for various sprocket speeds. The combined forces then are to be calculated using a sprocket speed of 4,000 rpm.)

3. Check the tension in the chain obtained in Part 1 (b) by an analogous method of treating the chain as a continuous belt.

The following assumptions may be made when solving this problem:

- The chain is slack and has no preload when it is stationary and not transmitting torque
- The center of gravity of the link is taken to be located on the link axis midway between the connecting pins
- The chain tension entering any link is equal numerically to the tension leaving the adjacent link
- The chain link makes forcible contact with the sprocket root on only one of the link tips—in this case, the leading tip.

The solution to the problem will be presented in the Third Quarter 1966 issue of the *General Motors Engineering Journal*.

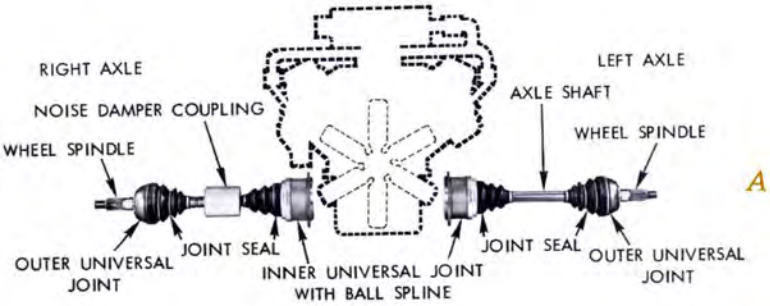

A

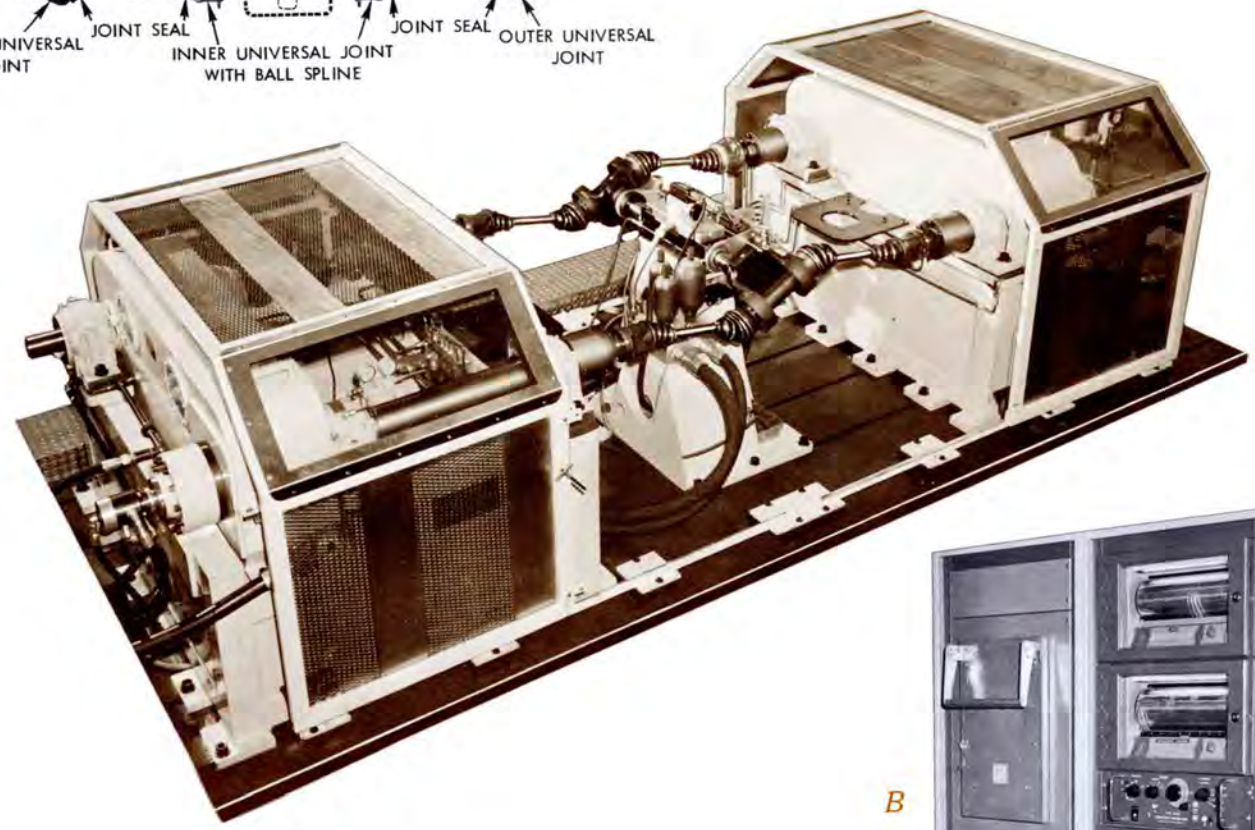

B

ENGINEERING TESTING

Engineers at Saginaw Steering Gear Division were involved with the design of several components, including the front axles, for the 1966 Oldsmobile Toronado. The front axles are complex mechanisms that include four Rzeppa-type universal joints (inset *A*). Special joint seals, capable of withstanding wheel speeds of 175 mph without distortion and impervious to temperature extremes and salt spray, had to be designed and tested. The final design of the axles had to transmit engine power smoothly to both front wheels at all speeds while being turned at any drive angle and distorted by every conceivable road condition.

During the development of the front axles, Saginaw engineers designed a special accelerated wear test machine for fatigue testing axle and joint designs. Driven by a 75-hp variable speed d-c drive motor, the machine consisted of a four-bar internal torque loop, variable while rotating, with hydraulic servo feedback control. The photograph shows four axles undergoing test on the device. The machine provided shaft test speeds up to 3,000 rpm with torque variable from zero to 30,000 in-lb.

Any program of speed, torque, and displacement could be run on the test machine. Oscillatory motion as great as ± four in. displacement at eight cycles per sec could be imposed on the test samples. This excursion simulated jounce conditions on the axle. The device also could rotate axles undergoing test up to 40° steer angle.

Infrared sensors were provided to measure universal joint temperatures during tests. These sensors could actuate automatic shut off switches in the event of a joint failure.

The machine control console (inset *B*) provided automatic recording of test parameters, such as torque, speed, and displacement. The console also was adaptable to provide complete control of the test through taped programs. Thus, actual road test conditions could be recorded in the field for simulation on the test equipment in the laboratory.

The development of new products and components involves many hours of testing design proposals to failure under the most severe operating conditions. In many cases, standard fatigue testing equipment can be modified to accommodate new designs. In other instances, special test equipment must be developed. The accelerated wear test machine developed by Saginaw engineers is an example of how special test equipment can be designed to perform the required job.